M-D Pneumatics™
Rotary Positive Displacement Blower

Manual 2017 1016 ENG

WARNING: Do Not Operate Before Reading Manual

CP Series
OPERATOR'S MANUAL

Models

2002	3002	4002	5003	6005	7006
2004	3003	4005	5006	6008	7011
	3006	4007	5009	6015	7018

Grease Lubrication / Air Service
Splash Lubrication / Air Service

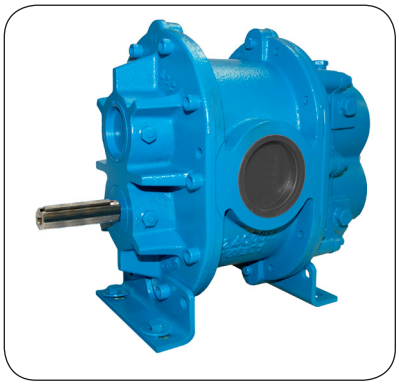

Copyright © 2016 Tuthill Vacuum & Blower Systems
All rights reserved. Product information and specifications subject to change.

Disclaimer Statement:
All information, illustrations and specifications in this manual are based on the latest information available at the time of publishing. The illustrations used in this manual are intended as representative reference views only. Products are under a continuous improvement policy. Thus, information, illustrations and/or specifications to explain and/or exemplify a product, service or maintenance improvement may be changed at any time without notice.

Rights Reserved Statement:
No part of this publication may be reproduced or used in any form by any means – graphic, electronic or mechanical, including photocopying, recording, taping or information storage and retrieval systems – without the written permission of Tuthill Vacuum & Blower Systems.

Copyright © 2016 Tuthill Vacuum & Blower Systems
All rights reserved. Product information and specifications subject to change.

Table of Contents

Introduction 1

Applicable Documentation 1

Scope of Manual..... 1

Conventions and Data Plate 2

Graphic Conventions in this Manual 2

Data Plate..... 3

Lifting 5

Description 6

Flow by Direction and Rotation 7

Specifications..... 8

Installation 11

General 11

Location..... 13

Foundation..... 13

Blower Air Intake 13

Soft Foot 14

Safety 14

Lubrication 15

Filling Procedure 16

Frequently Asked Questions Regarding Lubrication 17

Hazards Associated With Breakdown or Ignition of Lubrication 17

Release Lubricated Bearings – Grease Lubrication Series Only 17

Piping Connections 18

Hazards Associated With Hazardous Process Fluids 18

Blockage or Restriction 18

Motor Drives 19

Direct Coupled 19

V-Belts 19

Setting V-Belt Tension 20

V-Belt Troubleshooting 21

Motor and Electrical Connections 22

Operation 23

General 23

Start-Up Checklist 24

Stopping 25

Recommended Shutdown Procedure to Minimize Risk of Freezing or Corrosion 26

Maintenance 27

General 27

Regular Maintenance 27

Spare Parts 28

Factory Service and Repair 28

Long-Term Storage 29

Disassembly and Reassembly 30

Disassembly of Blower 30

Reassembly of Blower 33

Adjusting Rotor Interlobe Clearance 36

Lubrication, Final Assembly and Mounting 37

Troubleshooting 38

Assembly Clearances 40

Torque Chart 41

Recommended Lubricants 42

Recommended Lubricants for Rotary Blowers and Vacuum Boosters 42

Special Tool Drawings 44

Parts List 46

Assembly Drawings 48

Declaration of Incorporation 50

Warranty – Blower Products 51

Operating Data Form / Product Registration 52

01

INTRODUCTION

CONGRATULATIONS on the purchase of a new **CP Series Rotary Positive Displacement Blower** from Tuthill Vacuum & Blower Systems. Please examine the blower for shipping damage, and if any damage is found, report it immediately to the carrier. If the blower is to be installed at a later date, make sure it is stored in a clean, dry location and rotated regularly. Make sure covers are kept on all openings. If the blower is stored outdoors, be sure to protect it from weather and corrosion.

CP Series blowers are built to exacting standards and, if properly installed and maintained, will provide many years of reliable service. Read and follow every step of these instructions when installing and maintaining the blower.

NOTE: Record the blower model and serial numbers of the machine in the OPERATING DATA form on the inside back cover of this manual. Use this identification on any replacement part orders, or if service or application assistance is required.

APPLICABLE DOCUMENTATION

The applicable documents associated with this manual are:

- 2006/42/EC – Machinery Directive
- EN 1012-1:1996 - Compressors and vacuum pumps - Safety Requirements - Part 1: Compressors

SCOPE OF MANUAL

The scope of this manual and the Declaration of Incorporation includes the bare shaft rotary positive displacement blower.

02

CONVENTIONS AND DATA PLATE

GRAPHIC CONVENTIONS IN THIS MANUAL

This manual is the result of a risk assessment according to the applicable documents referenced in ***Applicable Documentation on page 1***. The following hazard levels are referenced within this manual:

⚠ DANGER

Indicates a hazardous situation that, if not avoided, will result in death or serious injury.

⚠ WARNING

Indicates a hazardous situation that, if not avoided, could result in death or serious injury.

⚠ CAUTION

Indicates a hazardous situation that, if not avoided, could result in minor or moderate injury.

NOTICE

Indicates a situation that can cause damage to the engine, personal property, and/or the environment or cause the equipment to operate improperly.

NOTE: Indicates a procedure, practice, or condition that should be followed in order for the equipment to function in the manner intended.

⚠ CAUTION

Read manual before operation or bodily harm may result. Attention should be given to the safety related sections of this manual.

DATA PLATE

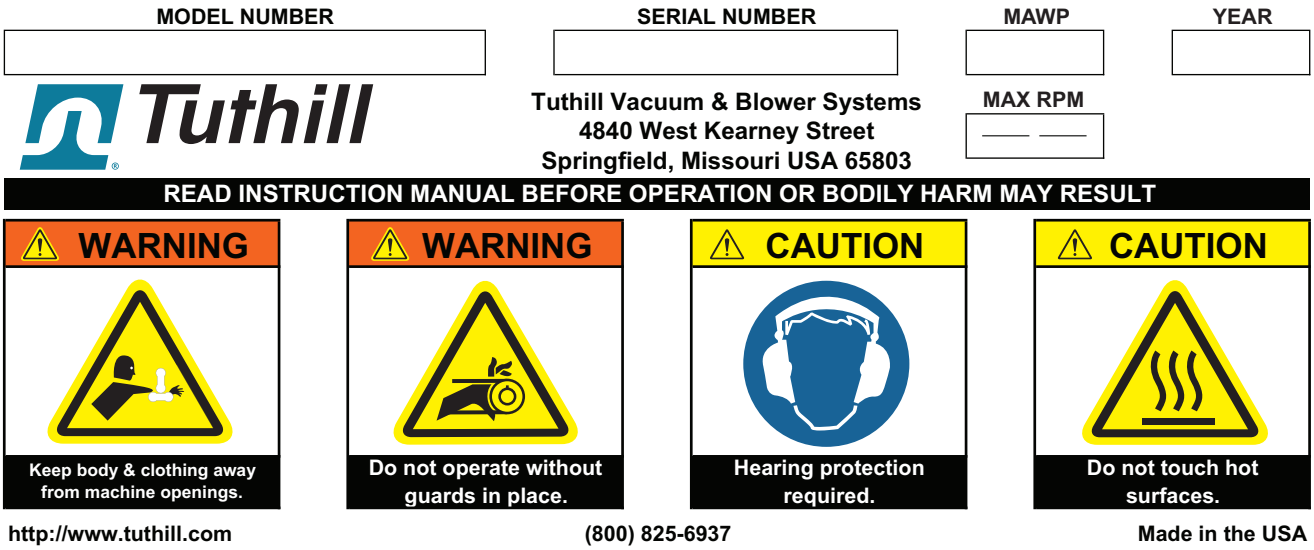

Figure 2-1 – General Operation and Symbols on Data Plate

The following information is contained on the data plate:

⚠ WARNING

Keep body and clothing away from machine.

During operation, keep body and clothing away from inlet and outlet of the blower.

⚠ WARNING

Do not operate without guards in place.

⚠ CAUTION

Hearing protection is required while the blower is in operation.

⚠ CAUTION

Do not touch hot surfaces.

The upper limit of the blower operation is 400°F (205°C). Do not touch the blower while it is in operation and assure blower is cool when not in operation.

MODEL NUMBER:	The specific model of the blower
SERIAL NUMBER:	Unique to each blower
YEAR:	Year of manufacture
MAWP:	Maximum Allowable Working Pressure The standard MAWP is per ***Table 4-2 – Maximum Operating Limits on page 9***. The MAWP shall not be exceeded.

03 LIFTING

⚠ WARNING

The blower must be handled using an appropriate device such as a fork truck or appropriate lifting device. *See Table 4-1 on page 8* for approximate weights. Care should be taken to assure blower does not over-turn during handling and installation.

04

DESCRIPTION

NOTICE

Refer to specific data sheets for flow capacities and vacuum capacities.

NOTE: Refer to diagrams in this manual for proper rotation and orientation in inlet and discharge.

Tuthill Vacuum & Blower Systems CP Series model rotary lobe blowers are positive displacement type units, whose pumping capacity is determined by size, operating speed, and differential pressure conditions. Blowers employ rotors rotating in opposite directions within a housing closed at the ends by end plates.

The inlet to the discharge is sealed with operating clearances that are very small. Internal lubrication is not needed, as there is no moving contact.

Clearances between the rotors during rotation are maintained by a pair of accurately machined helical timing gears, mounted on the two shafts extended outside the air chamber. The intermeshing rotary lobes are designed to rotate and trap air or gas between each rotor and the housing. As the rotor lobes rotate past the edge of the suction port, the trapped air or gas is essentially at suction pressure and temperature. Since the blower is a constant volume device, the trapped air remains at suction pressure until the leading rotor lobe opens into the discharge port. The close clearances between the rotors inhibit back slippage of the trapped volume from between the rotors, and the trapped volume is forced into the discharge piping. Compression occurs not internal to the blower but by the amount of restriction, either downstream of the blower discharge port or upstream of the blower inlet port.

Figure 4-1 illustrates the air movement within the machine. In addition, the machine can operate in either direction.

Never attempt to control capacity by means of a throttle valve in the intake or discharge piping. This will increase the power load on the drive system, will increase operating temperatures, and can overload and/or seriously damage the blower. Likewise, if the possibility exists that flow to the blower inlet may be cut off during normal operation of a process, install an adequate vacuum relief valve. A pressure-type relief valve in the discharge line near the blower is also recommended for protection against cutoff or blocking in this line. Use check valves on each blower when more than one blower is connected to a discharge line.

When a belt drive is used, it is possible to adjust blower speed to obtain the desired capacity by changing the diameter of one or both sheaves, or by using a variable-speed motor pulley. In a direct-coupled arrangement, a variable-speed motor or transmission is required. Gas blowers can use bypasses, but some applications may require additional cooling. If there is a large volume of high-pressure air or gas downstream of the blower, a check valve in the piping downstream of the blower will protect the blower from overspeeding in a backward direction upon shutdown.

Consult a Tuthill Vacuum & Blower Systems sales professional if questions arise.

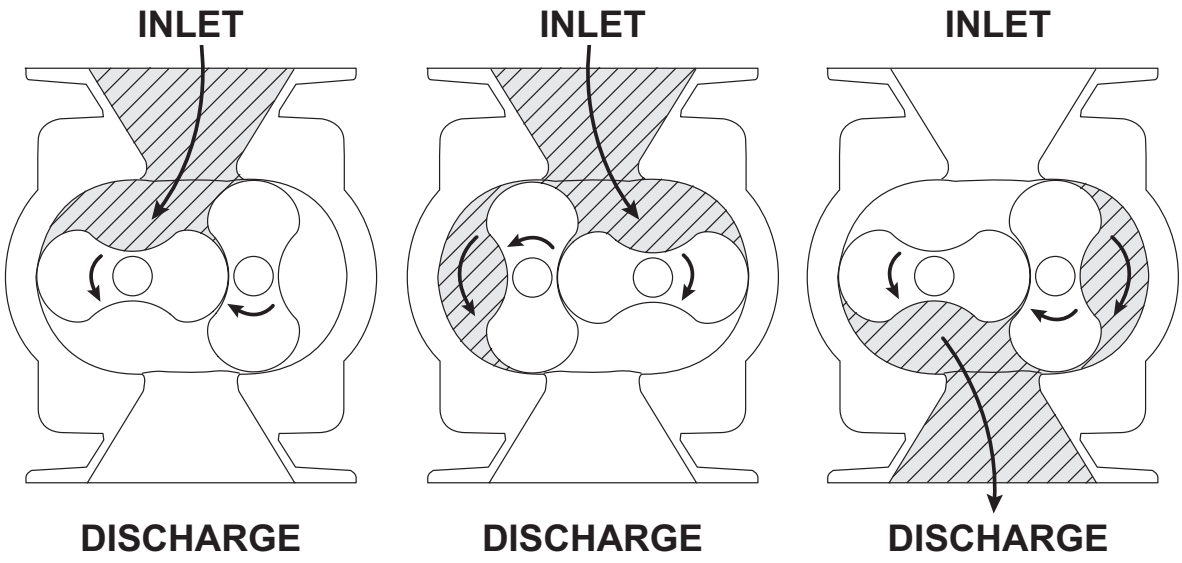

Figure 4-1 – General Operation Principle

FLOW BY DIRECTION AND ROTATION

⚠ WARNING

Refer to diagrams in this manual for proper rotation and orientation in inlet and discharge.

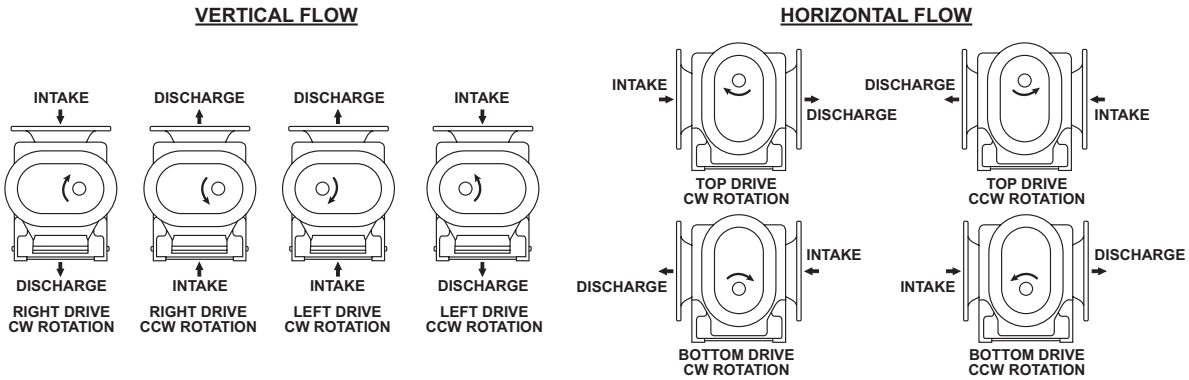

Figure 4-2 – Flow Direction by Rotation

SPECIFICATIONS

MODEL	APPROXIMATE OIL CAPACITY[1]				PORT SIZE	MAXIMUM RPM	APPROXIMATE WEIGHT
	VERTICAL FLOW		HORIZONTAL FLOW				
	GEAR END[2]	DRIVE END[3]	GEAR END[2]	DRIVE END[3]			
2002	3.4 oz (101 mL)	–	1.7 oz (50 mL)	–	1 in. (25 mm)	5,275	41 lb (19 kg)
2004	3.4 oz (101 mL)	–	1.7 oz (50 mL)	–	2 in. (51 mm)	5,275	53 lb (24 kg)
3002	6.0 oz (177 mL)	4.0 oz (118 mL)	3.4 oz (101 mL)	2.5 oz (74 mL)	1.25 in. (32 mm)	3,600	78 lb (35 kg)
3003	6.0 oz (177 mL)	4.0 oz (118 mL)	3.4 oz (101 mL)	2.5 oz (74 mL)	2 in. (51 mm)	3,600	83 lb (38 kg)
3006	6.0 oz (177 mL)	4.0 oz (118 mL)	3.4 oz (101 mL)	2.5 oz (74 mL)	2.5 in. (64 mm)	3,600	113 lb (51 kg)
4002	8.5 oz (251 mL)	6.4 oz (189 mL)	5.8 oz (172 mL)	4.7 oz (139 mL)	1.5 in. (38 mm)	3,600	95 lb (43 kg)
4005	8.5 oz (251 mL)	6.4 oz (189 mL)	5.8 oz (172 mL)	4.7 oz (139 mL)	2 in. (51 mm)	3,600	127 lb (58 kg)
4007	8.5 oz (251 mL)	6.4 oz (189 mL)	5.8 oz (172 mL)	4.7 oz (139 mL)	3 in. (76 mm)	3,600	146 lb (66 kg)
5003	18.3 oz (541 mL)	10.2 oz (302 mL)	7.1 oz (210 mL)	5.4 oz (160 mL)	2.5 in. (64 mm)	2,850	152 lb (69 kg)
5006	18.3 oz (541 mL)	10.2 oz (302 mL)	7.1 oz (210 mL)	5.4 oz (160 mL)	4 in. (102 mm)	2,850	185 lb (84 kg)
5009	18.3 oz (541 mL)	10.2 oz (302 mL)	7.1 oz (210 mL)	5.4 oz (160 mL)	4 in. (102 mm)	2,850	222 lb (101 kg)
6005	25.5 oz (754 mL)	18.0 oz (532 mL)	16.9 oz (500 mL)	9.0 oz (266 mL)	3 in. (76 mm)	2,350	250 lb (113 kg)
6008	25.5 oz (754 mL)	18.0 oz (532 mL)	16.9 oz (500 mL)	9.0 oz (266 mL)	5 in. (127 mm)	2,350	310 lb (141 kg)
6015	25.5 oz (754 mL)	18.0 oz (532 mL)	16.9 oz (500 mL)	9.0 oz (266 mL)	6 in. (152 mm)	2,350	456 lb (207 kg)
7006	28.7 oz (849 mL)	–	20.3 oz (600 mL)	–	4 in. (102 mm)	2,050	425 lb (193 kg)
7011	28.7 oz (849 mL)	–	20.3 oz (600 mL)	–	6 in. (102 mm)	2,050	555 lb (252 kg)
7018	28.7 oz (849 mL)	–	20.3 oz (600 mL)	–	8 in. (102 mm)	2,050	675 lb (306 kg)

1 Oil capacities are based on filling from dry condition. Less oil may be needed depending on emptiness of oil reservoir(s) after draining. Always fill the gear housing until oil drips out of the oil level hole. Replace plugs in their respective holes. Following this procedure will ensure proper oil level.
2 Gear End amounts apply to all CP Series blowers.
3 Drive End amounts apply only to Splash Lubrication models.

Table 4-1 – Specifications

MODEL	MAXIMUM RPM	MAXIMUM PRESSURE DIFFERENTIAL*	MAXIMUM VACUUM*	MAXIMUM TEMPERATURE RISE*	MAWP
2002	5,275	12 psi (827 mbar)	16 inch-Hg (542 mbar)	225°F (125°C)	15 psi (1,034 bar)
2004	5,275	7 psi (483 mbar)	16 inch-Hg (542 mbar)	185°F (103°C)	15 psi (1,034 bar)
3002	3,600	15 psi (1,034 mbar)	16 inch-Hg (542 mbar)	210°F (117°C)	15 psi (1,034 bar)
3003 (2-lobe)	3,600	15 psi (827 mbar)	15 inch-Hg (508 mbar)	260°F (100°C)	15 psi (1,034 bar)
3003 (3-lobe)	3,600	12 psi (827 mbar)	15 inch-Hg (508 mbar)	260°F (100°C)	15 psi (1,034 bar)
3006	3,600	7 psi (483 mbar)	15 inch-Hg (508 mbar)	170°F (94°C)	15 psi (1,034 bar)
4002	3,600	15 psi (1,034 mbar)	16 inch-Hg (542 mbar)	220°F (122°C)	17 psi (1,172 bar)
4005	3,600	10 psi (690 mbar)	16 inch-Hg (542 mbar)	210°F (117°C)	15 psi (1,034 bar)
4007 (2-lobe)	3,600	17 psi (483 mbar)	15 inch-Hg (508 mbar)	260°F (94°C)	15 psi (1,034 bar)
4007 (3-lobe)	3,600	7 psi (483 mbar)	15 inch-Hg (508 mbar)	260°F (94°C)	15 psi (1,034 bar)
5003	2,850	15 psi (1,034 mbar)	16 inch-Hg (542 mbar)	260°F (108°C)	17 psi (1,172 bar)
5006 (2-lobe)	2,850	18 psi (896 mbar)	16 inch-Hg (542 mbar)	195°F (108°C)	15 psi (1,034 bar)
5006 (3-lobe)	2,850	15 psi (896 mbar)	16 inch-Hg (542 mbar)	195°F (108°C)	15 psi (1,034 bar)
5009 (2-lobe)	2,850	14 psi (483 mbar)	15 inch-Hg (508 mbar)	250°F (89°C)	15 psi (1,034 bar)
5009 (3-lobe)	2,850	8 psi (483 mbar)	15 inch-Hg (508 mbar)	250°F (89°C)	15 psi (1,034 bar)
6005	2,350	15 psi (1,034 mbar)	16 inch-Hg (542 mbar)	260°F (139°C)	17 psi (1,172 bar)
6008	2,350	14 psi (965 mbar)	16 inch-Hg (542 mbar)	260°F (133°C)	15 psi (1,034 bar)
6015	2,350	7 psi (483 mbar)	12 inch-Hg (406 mbar)	180°F (100°C)	15 psi (1,034 bar)
7006	2,050	15 psi (1,034 mbar)	16 inch-Hg (542 mbar)	235°F (131°C)	17 psi (1,172 bar)
7011	2,050	10 psi (690 mbar)	16 inch-Hg (542 mbar)	210°F (117°C)	15 psi (1,034 bar)
7018	2,050	6 psi (414 mbar)	12 inch-Hg (406 mbar)	120°F (67°C)	15 psi (1,034 bar)

* Maximum conditions based upon 70°F (21°C) inlet temperature and 14.7 psi (1 bar) absolute inlet pressure.

Table 4-2 – Maximum Operating Limits

⚠ WARNING

The maximum pressure differential is based on the difference between the inlet pressure and the outlet pressure. The maximum pressure differential shall not be exceeded. Exceeding the maximum pressure differential will cause serious damage to the equipment and could cause bodily injury.

⚠ WARNING

The maximum allowable working pressure (MAWP) is based on the absolute pressure of the blower housing and is NOT the maximum allowable pressure differential. Exceeding the MAWP will cause serious damage to the equipment and could cause bodily injury.

To permit continued satisfactory performance, a blower must be operated within certain approved limiting conditions. The manufacturer's warranty is, of course, also contingent on such operation.

Maximum limits for pressure, temperature, and speed are specified in ***Table 4-2 on page 9*** for various blower sizes when operated under the standard atmospheric conditions. Do not exceed any of these limits.

NOTICE

Specially ordered blowers with nonstandard construction, or with rotor end clearances greater than shown in ***Assembly Clearances on page 40****, will not have the operating limits specified here. Contact your Tuthill Vacuum & Blower Systems sales representative for specific information.*

NOTICE

Special attention must be paid when a blower has a higher than standard ambient suction temperature. Special recommendations for operating parameters and/or additional cooling may be recommended. Consult the factory or local representative for appropriate information.

05 INSTALLATION

GENERAL

⚠ DANGER

The blower is not intended to be used with explosive products or in explosive environments. The blower is not intended to be used in applications that include hazardous and toxic gases. Consult the factory for support.

⚠ DANGER

It is the responsibility of the installer to assure that proper guarding is in place and compliant with all applicable regulatory requirements.

⚠ WARNING

The bare shaft blower can generate excessive noise. Methods to reduce the noise levels by installing inlet and outlet silencers will be required. Even with inlet and outlet silencers, hearing protection will be required.

⚠ WARNING

Customers are warned to provide adequate protection, warning and safety equipment necessary to protect personnel against hazards in the installation and operation of this equipment in the system or facility.

⚠ WARNING

The standard MAWP is per *Table 4-2*. The MAWP shall not be exceeded unless specific factory testing of the pressure containing components of the blower has been performed.

⚠ WARNING

***Table 4-2* states the maximum operating speed in RPM (rotations per minute) and maximum temperature. Do not exceed these limits. The installation of the blower shall take these critical operating parameters into account and adequate control features implemented.**

⚠ WARNING

Upon completion of the installation, and before applying power, rotate the drive shaft by hand. It must move freely. If it does not, look for uneven mounting, piping strain, excessive belt tension or coupling misalignment or any other cause of binding. If blower is removed and still does not move freely, check inside the blower housing for foreign material.

NOTICE

Remove the protective covers from the shaft and inspect for damage.

Carefully check to ensure that no transit damage has been sustained. If damage has occurred from shipment, file a claim with the carrier immediately. Preserve the shipping container for inspection by the carrier.

NOTICE

In the event that your unit sustains damage while being shipped to your facility, do not return it to the factory without first obtaining shipping instructions from us.

Do not remove protective covers and plugs until the connections are complete. Mount the blower on a flat, level surface. Use a baseplate that is rigid, solidly supported, and structurally sound. Shim under the legs where necessary so that each leg of the blower supports an equal share of the blower weight. This is necessary to prevent twisting of the blower. Make sure the feet rest evenly on the mounting surface before fastening down. Twisting or cramping the blower during mounting will cause rotor contact and binding during operation, resulting in a condition called “soft foot.” ***See Soft Foot on page 14*** for further details and preventative measures.

A blower that is factory-mounted on a base should not require such adjustments. However, since the assembly can become twisted in shipping or installation, check for soft foot after installing the base. Shims may be needed for alignment. Loosen the foot hold-down screws to check foot contact with the mounting surface. Mount the base on a solid foundation or heavy flooring, using shims as necessary at bolting points to prevent warping the assembly.

Transmission of small operating vibrations to a support structure may be objectionable in some applications. Use of vibration isolators or vibration-absorbing materials can be effective in overcoming this transmission. To avoid causing distortion, apply the treatment under the common motor/blower base or mounting plate rather than directly under the feet alone.

Make sure piping is accurately squared with the blower and supported independently. Stress imparted from incorrectly aligned piping or mounting will create problems with bearing and seal life, possibly leading to premature internal contact. The blower should sit stress free and evenly on its supporting surface. Take care to evenly tighten the mounting bolts to avoid imparting undue stress into the blower. Stress can be checked in a free state with feeler stock or verified on a previously installed blower with the aid of a dial indicator. Spring or gap should be less than 0.002 in. (0.05 mm).

Use only clean, new pipe and make certain it is free of scale, cuttings, weld beads, dirt, or any other foreign material. To guard against damage to the blower, make sure that an inlet filter is used. Clean the filter of collected debris after 3 hours of operation and periodically thereafter. ***See Piping Connections on page 18*** for additional details.

Figure 5-1 shows a typical complete installation of the blower and accessories. Note the absence of throttle or shut-off valves in both discharge and intake piping. If it is possible for airflow to be cut off in either line, add a pressure and/or vacuum relief valve. In some installations, it may be desirable to use only an inlet silencer-cleaner supported directly from the blower connection. Keep the weight of accessories and piping to a minimum to prevent blower casing distortion. If the weight exceeds 10% of blower weight, support the components independently of the blower and connect them with a flexible hose or connectors. The approximate weight of the blower is listed in ***Table 4-1 on page 8***.

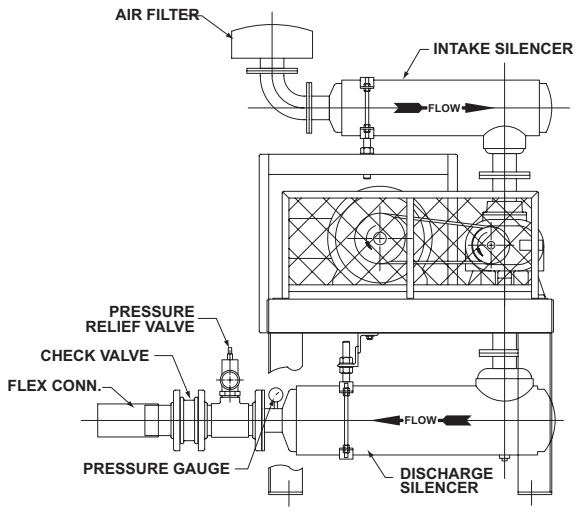

Figure 5-1 – Typical Blower Installation

A blower may be driven by direct-coupling to the driver or by V-belt drive for the purpose of obtaining other speeds within the approved range. ***See Motor Drives on page 19*** for more information.

Blowers from Tuthill Vacuum & Blower Systems are internally and externally treated after factory assembly and testing to protect against rusting in normal atmospheric conditions prior to installation. The maximum period of internal protection is considered to be 6 months under average conditions, provided closing plugs and seals are not removed. Protection against chemical or salt-water atmosphere is not provided. Avoid opening the blower until ready to begin installation, as protection will be quickly lost due to evaporation. For recommended preparations for long-term storage (longer than 6 months), ***see Long-Term Storage on page 29***.

Location

Install the blower in a room or outdoor area that supplies adequate space and lighting for routine maintenance. Make sure that indoor installation areas are well ventilated and kept as cool as possible, because operating the blower at elevated temperatures can result in nuisance overload or temperature shutdowns. An unprotected outdoor installation is satisfactory only when correct lubrication for the expected temperatures is provided, as per ***Recommended Lubricants on page 42***.

Foundation

The blower does not need a special foundation. However, it does require a solid, level floor and adequate frame support. Bolt the blower system to the floor and seal any cracks.

Blower Air Intake

To minimize maintenance, supply the blower with the cleanest air possible. The air must not contain any flammable or toxic gases, as the blower will concentrate these gases. This could result in damage to the blower and surrounding property and lead to personal injury or death. Do not block or restrict the opening of the blower, as the motor could overheat and fail.

Do not use blowers on explosive or hazardous gases. Do not exceed the limits described in ***Table 4-2 on page 9*** on performance criteria such as pressure differential, running speed, and discharge temperature.

If it is necessary to take air from a remote source, such as in a vacuum application, make sure the diameter of the piping is at least equal to the diameter of the blower inlet. For distances greater than 20 ft (6 m), enlarge the pipe diameter to reduce inlet restriction. Excessive restriction will reduce the efficiency of the blower and elevate its discharge temperature. The piping used should also be corrosion-resistant and free of scale and dirt. Keep the inlet covered to keep out foreign objects and rain. Vacuum kits are available.

Soft Foot

Soft foot is a condition in which one of the blower feet does not sit flat on the base. Soft foot is usually due to irregularities in the surface to which the blower is mounted. When the bolt on the foot gets tightened, a slight distortion occurs that can affect bearing and seal life as well as internal contact between parts.

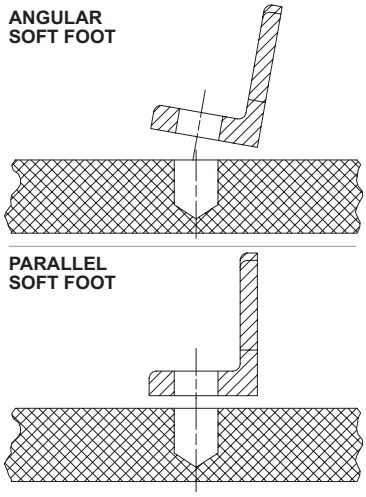

Figure 5-2 – Illustrations of Soft Foot

1. Place the blower on the base.
2. Check each foot for gaps between the foot and base (soft foot). Shim as necessary to fill the gap within 0.002 in. (0.05 mm).
   Figure 5-2 shows the two most common types of soft foot conditions. If either type is present at a measurement of more than 0.003 in. (0.076 mm), the blower may fail prematurely.
3. Tighten all bolts.
4. Mount a dial indicator on the base contacting one foot at 12 o'clock position.
5. Loosen the bolt on that foot. Observe indicator travel and add shims as needed to reduce "spring" to less than 0.002 in. (0.05 mm). Repeat steps 4 and 5 on the remaining feet.

SAFETY

Tuthill Vacuum & Blower Systems recommends the use of relief valves to protect against excessive pressure or vacuum conditions. Test these valves at initial start-up to be sure they are properly adjusted to relieve at or below the maximum pressure differential rating of the blower.

DANGER

It is the responsibility of the installer to assure that proper guarding is in place and compliant with all applicable regulatory requirements.

DANGER

Internal and external rotating parts of the blower and driving equipment can produce serious physical injuries. The blower should never be run with the inlet or discharge piping removed. If it becomes necessary to inspect the rotating parts of the blower or to change V-belts, be absolutely sure that all power to the motor controls has been shut off, the motor controls are locked out, and properly tagged before proceeding.

DANGER

Assure that properly sized vacuum breaks/ relief valves are used on the inlet side of the blower. Also assure that properly sized pressure relief valves are used on the outlet of the blower. The sizing shall be such to assure that the proper flow can be achieved without exceeding the rated vacuum and pressure ratings.

DANGER

Blower housing and associated piping or accessories may become hot enough to cause major skin burns on contact.

WARNING

Use lock out/tag out procedures to disable the electrical energy source before any service or work is done on the blower.

WARNING

Avoid extended exposure in close proximity to machinery with high intensity noise levels. Wear adequate ear protection.

NOTE: Use proper care and good procedures in handling, lifting, installing, operating, and maintaining the equipment.

LUBRICATION

Every blower from Tuthill Vacuum & Blower Systems is factory-tested, oil-drained, and shipped dry to its installation point. Fill both independent oil reservoirs to the proper level before operation.

Shaft bearings at the gear end of the blower are splash-lubricated by one or both gears dipping into an oil reservoir formed in the gear end plate and cover. Shaft bearings at the drive end of the blower are lubricated by a slinger assembly dipping into an oil reservoir. Before starting the blower, fill the oil sumps as described in ***Filling Procedure on page 16***.

Add oil to the blower in the quantity listed in***Table 4-1 on page 8***. Make sure oil level is maintained within the notched area of the sight glass. ***See Figure 5-3***. Lower drive blowers have “bull’s eye” type oil level gauges. Maintain oil levels at the center of the glass.

WARNING

Never attempt to change or add lubrication while the blower is running. Failure to heed this warning could result in damage to the equipment or personal injury. Oil must be checked when the blower is NOT running.

WARNING

Properly dispose of the spent lubricants. Refer to the manufacturer of the lubricant and any regulations to assure proper and safe disposal.

WARNING

Do not start the blower until you are sure oil has been put in the gear housing and rear cover. Operation of the blower without proper lubrication will cause the blower to fail and void the warranty.

NOTICE

*Most CP Series blowers are shipped from the factory in a left hand drive, vertical flow configuration. If drive shaft location is changed, the oil level plugs, sight glasses and breathers must be relocated to proper positions, as shown in **Figure 5-3**. Failure to change plug location will result in blower failure and void the product warranty.*

Filling Procedure

See Figure 5-3. See Recommended Lubricants on page 42 for suggested lubricants and grease.

1. Remove the fill plugs or breathers from both gear end and drive end plates.
2. Slowly pour oil through the fill until oil appears in the oil sight glass. Bring the oil level to the center of the sight glass.
3. Verify oil level is at proper level in both gear end and drive end sight glasses.
4. Replace the fill plugs or breathers that were removed in step 1.

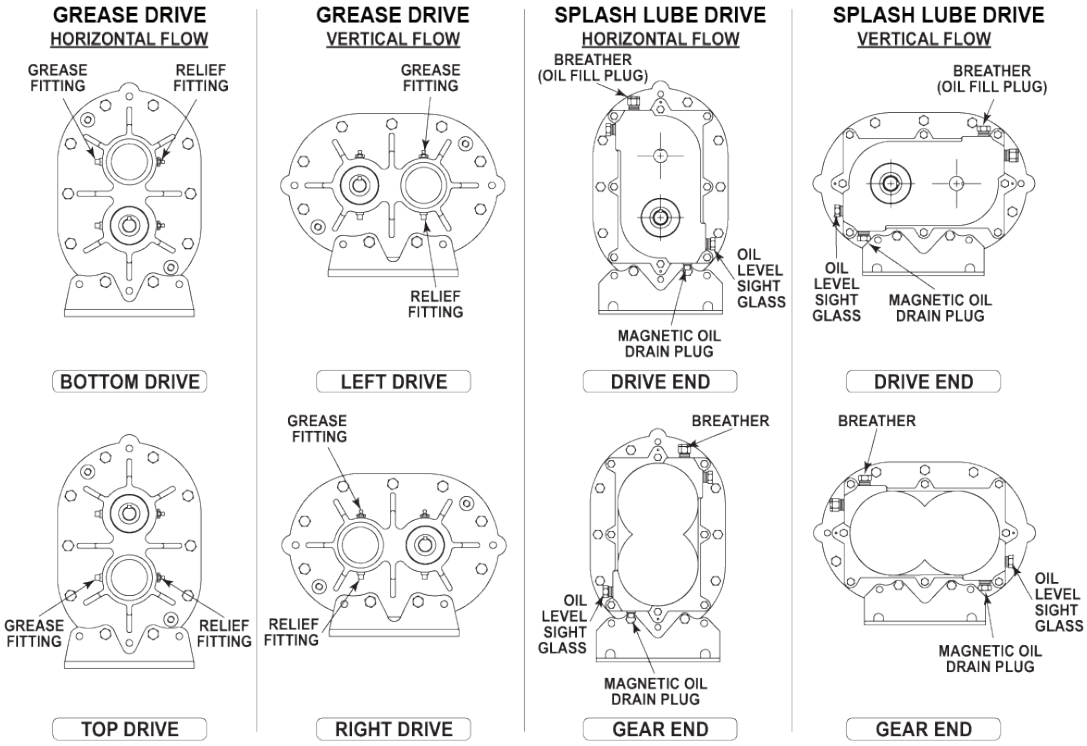

Figure 5-3 – Location of Oil Fill, Drain and Level Gauges on CP Series Blowers

Frequently Asked Questions Regarding Lubrication

What is the functional detriment if the "wrong oil" is used?

The lubricant is selected based on bearing speed, gear speed, and operating temperature. If the lubricant is too light, it increases wear by not separating the sliding surfaces and it will not remove the heat adequately. If the lubricant is too thick, the drag in the bearings is increased, causing them to run hotter. Thicker lubricant will not flow as readily into the gears and it will reduce the available backlash. Lubricants at our conditions are incompressible.

What is the functional detriment if the oil is not serviced?

If the lubricant is not serviced at the proper interval, the shearing action in the bearing and the gears will begin to take its toll and the lubricant will thicken. The blower will run hotter and the wear on moving parts will increase. The lubricant will generally appear dirtier, caused by material rubbing off the components. The lubricant will discolor because of overheating. An indicator of the breakdown of a lubricant is the increase in the Total Acid Number (TAN) and a change of 10 percent in the base viscosity.

Several things are happening as the lubricant goes through the blower. First, it is absorbing frictional energy in the form of heat. This heat has to be dissipated through either surface contact with cooler materials or in a rest volume of lubricant. While reducing the friction, the lubricant is also going through a shearing process and the molecular structure is broken down.

The result is that the lubricant will begin to thicken because of the shorter molecular chains and the drop out of additive packages. The thickened lubricant will cause more drag, increasing the friction and heat and further degrading the lubricant.

Operation of the blower (environment, run time, speed, and pressure) has a direct effect on duty cycles. The published cycles are based on worst-case conditions.

Hazards Associated With Breakdown or Ignition of Lubrication

⚠ DANGER

There is a risk associated with the lubrication media breaking down and resulting in a hazardous fluid or vapor. There may also be a hazard associated with the ignition of the lubrication media. Refer to the lubrication manufacturer's applicable instruction for safety precautions.

Release Lubricated Bearings – Grease Lubrication Series Only

Service the drive end bearing at regular intervals (see ***Table 5-1***). Use NLGI #2 premium-grade, petroleum-base grease with high temperature resistance and good mechanical stability, such as PneuLube grease, available from a local Tuthill Vacuum & Blower System professional. Use a pressure gun to force new grease into each bearing until traces of clean grease come out of the relief fitting.

SPEED IN RPM	OPERATING HOURS PER DAY		
	8	16	24
	GREASING INTERVALS IN WEEKS		
750 – 1,000	7	4	2
1,000 – 1,500	5	2	1
1,500 – 2,000	4	2	1
2,000 – 2,500	3	1	1
2,500 – 3,000	2	1	1
3,000 and up	1	1	1

Table 5-1 – Suggested Lubrication Intervals for Grease Lubricated Bearings

NOTICE

To avoid blowing out the drive shaft seal, do not grease too rapidly.

NOTE: See *Figure 5-3* for locations of grease fittings and grease reliefs for horizontal and vertical flow blowers.

PIPING CONNECTIONS

WARNING

Pipe loading on the blower should be negligible as pipe loading can cause distortion of the blower. Use proper supports and pipe hangers to assure that there is no loading.

NOTICE

Remove the protective covers from the inlet and outlet ports and inspect for dirt and foreign material.

Inlet and outlet connections on all blowers are large enough to handle maximum volume with minimum friction loss. Maintain same-diameter piping. Do not support silencers by the blower. Avoid stress loads and bending moments.

Be certain all piping is clean internally before connecting to the blower. Place a 16-mesh wire screen backed with hardware cloth at or near the inlet connections for the first 50 hours of use until the system is clean. Clean the screen after 3 hours of operation and completely discard it once the system is clean, as it will eventually deteriorate and small pieces going into the blower can cause serious damage. A horizontal or vertical airflow piping configuration is easily achieved by rearranging the mounting feet position.

Hazards Associated With Hazardous Process Fluids

DANGER

It shall be the responsibility of the installer to ensure that piping is adequate, sealing between pipe joints is adequate for the process fluids and proper process and pressure protection devices are in place. It is also the responsibility of the installer to assure that process gases are not vented in a manner that would be hazardous.

Refer to the manufacturer of the process media to assure that proper safety precautions are in place.

Blockage or Restriction

WARNING

Damage to the blower could occur if there is blockage in the inlet or outlet ports or piping. Care should be taken when installing the blower to assure that there are no foreign objects or restrictions in the ports or piping.

MOTOR DRIVES

Two drive connections commonly used are direct drive and V-belt drive.

Direct Coupled

When installing the motor directly to the blower, align the shafts to the coupling according to the coupling manufacturer's instructions. Blowers shipped with the motor directly coupled and mounted on a common base have been aligned prior to shipment. Further alignment is not normally necessary, but be sure to check the alignment and make adjustments if necessary prior to starting the blower.

Coupling halves must correctly fit the blower and drive shafts so that only light tapping is required to install each half. The two shafts must be accurately aligned. A direct-coupled blower and motor must be aligned with the two shafts having no more than 0.005 in. (13 mm) Total Indicator Reading (TIR). Make sure the face is aligned within 0.002 in. (0.05 mm).

Establish proper gap between coupling halves according to the coupling manufacturer's instructions with the motor armature. Proper gap will minimize the chance for end thrust on the blower shaft. Re-align and grease all direct-coupled base-mounted blowers after field installation.

V-Belts

If the motor and blower are V-belt connected, the sheaves on both the motor and blower shafts should be as close to the shaft bearings as possible. Blower sheave is not more than 1/4 in. (6.5 mm) from the blower drive end cover. The drive sheave is as close to the driver bearing as possible. Take care when installing sheaves on the blower and motor shafts. Make sure the face is accurately in line to minimize belt wear.

Adjust the belt tension to the manufacturer's specifications using a belt tension tester. Check new belts for proper tension after 24 hours of run time. When manufacturer data is not available, industry guidelines recommend 1/64 in. deflection for each inch of span (0.157 mm deflection per centimeter of span) at 8 – 10 lb (3.6 – 4.5 kg) of force in the center of the belt.

Insufficient tensioning is often indicated by slipping (squealing) at start-up. Do not use belt dressing on V-belts. Keep sheaves and V-belts free of oil and grease. Remove tension from belts if the drive is to be inactive for an extended period of time. For more specific information, consult the drive manufacturer. In a V-belt drive, the blower sheave must fit its shaft accurately, run true, and be mounted as close to the bearing housing as possible to minimize bearing loads.

A tight or driving fit will force the drive shaft out of its normal position and cause internal damage. A loose fit will result in shaft damage or breaking. Make sure the motor sheave fits correctly and is properly aligned with the blower sheave.

Adjust the motor position on its sliding base so that belt tension is in accordance with drive manufacturer's instructions. Always avoid excessive belt tension. Recheck tension after the first 10 hours of operation and periodically thereafter to avoid slippage and loss of blower speed.

Check the blower after installation and before applying power by rotating the drive shaft by hand.

If the drive shaft does not rotate freely:

- Look for uneven mounting, piping strain, excessive belt tension, or coupling misalignment
- Check the blower to make sure oil was added to the reservoirs

Setting V-Belt Tension

Proper belt tension is essential to long blower life. ***Figure 5-4***, ***Figure 5-5***, and the following procedure are provided to aid in field-adjusting V-belts (when the blower is so equipped) for maximum performance. A visual inspection of the V-belt drive should yield the appearance shown in ***Figure 5-4***.

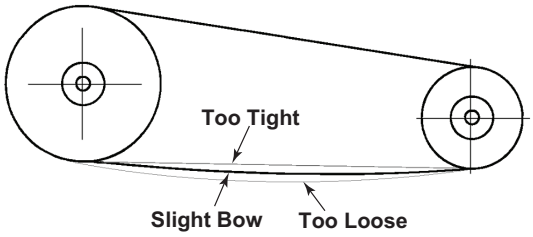

Figure 5-4 – General appearance of a V-belt drive

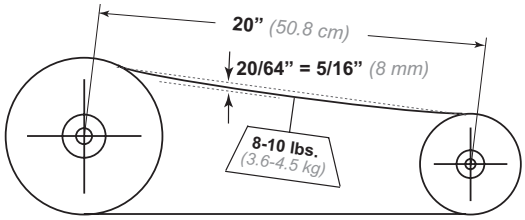

Figure 5-5 – Setting of proper tension for a V-belt drive

Factors outside the control of the belt tensioning system used on an individual blower package assembly, such as environmental factors and quality of the belts installed, may contribute to decreased belt life. Such factors can cause wear of the belts beyond the ability of the tensioning system to compensate.

As such, it is recommended to check belt tension monthly and make any manual adjustments found necessary.

1. Turn off and lock out power.
2. Remove the belt guard fasteners (if equipped).
3. Remove the belt guard.
4. Check and adjust the belt tension as necessary. Tension should be 1/64 in. deflection per inch of span (0.157 mm deflection per centimeter of span) between sheaves, with 8 – 10 lb (3.6 – 4.5 kg) force applied at the center point of the top section of belt.
5. Install the belt guard, making sure that all drive components are free of contact with the guard.
6. Install the belt guard fasteners that were removed in step 2.
7. Unlock the power and start the blower.
8. Resume normal operation.

V-Belt Troubleshooting

PROBLEM	POSSIBLE CAUSES	SOLUTION
Belts slip (sidewalls glazed)	Not enough tension	Replace belts; apply proper tension.
Drive squeals	Shock load	Apply proper tension.
	Not enough arc of contact	Increase center distance.
	Heavy starting load	Increase belt tension.
Belt(s) turned over	Broken cord caused by prying on sheave	Replace set of belts and install correctly.
	Overloaded drive	Redesign drive.
	Impulse loads	Apply proper tension.
	Misalignment of sheave and shaft	Re-align drive.
	Worn sheave grooves	Replace sheaves.
	Excessive belt vibration	Check drive design. Check equipment for solid mounting. Consider use of banded belts.
Mismatched belts	New belts installed with old belts	Replace belts in matched sets only.
Breakage of belt(s)	Shock loads	Apply proper tension; recheck drive.
	Heavy starting loads	Apply proper tension; recheck drive. Use compensator starting.
	Belt pried over sheaves	Replace set of belts correctly.
	Foreign objects in drives	Provide drive guard.
Rapid belt wear	Sheave grooves worn	Replace sheaves.
	Sheave diameter too small	Redesign drive.
	Mismatched belts	Replace with matched belts.
	Drive overloaded	Redesign drive.
	Belt slips	Increase tension.
	Sheaves misaligned	Align sheaves.
	Oil or heat condition	Eliminate oil. Ventilate drive.

MOTOR AND ELECTRICAL CONNECTIONS

⚠ WARNING

The motor and connections shall be protected to assure that product and environmental condensation does not come in contact with the electrical connections.

NOTICE

It is the responsibility of the installer to assure that the motor is in compliance with the latest edition of IEC 60204-1 and all electrical connections are performed per IEC 60204-1, this includes overcurrent protection.

Wire the motor and other electrical devices, such as solenoid valves and temperature switch, to the proper voltage and amperage as indicated on the nameplate of the component being wired. Turn the blower by hand after wiring is completed to determine that there are no obstructions and that the blower turns freely. Then, momentarily start the blower to check the direction of rotation. ***Figure 4-2*** shows direction of airflow in relation to rotor rotation. The airflow direction can be reversed by reversing the appropriate motor leads.

06

OPERATION

GENERAL

⚠ DANGER

The blower is not intended to be used with explosive products or in explosive environments. The blower is not intended to be used in applications that include hazardous and toxic gases. Consult the factory for support.

⚠ WARNING

Do not operate without guards in place.

⚠ WARNING

Maximum operating speed: *Table 4-2* states the maximum operating speed in RPM (rotations per minute), the maximum pressure differential, maximum vacuum and maximum temperature rise. Do not exceed these limits.

⚠ WARNING

The blower can generate excessive noise. Hearing protection is required while the unit is in operation.

Before starting the blower for the first time under power, recheck the installation thoroughly to reduce the likelihood of difficulties. Use the following checklist as a guide, but consider any other special conditions in your installation.

1. Be certain no bolts, rags, or dirt have been left in blower.
2. Be certain that inlet piping is free of debris. If an open outdoor air intake is used, be sure the opening is clean and protected by an inlet filter. This also applies to indoor use.
3. If installation is not recent, check blower leveling, drive alignment, belt tension, and tightness of all mounting bolts.
4. Be certain the proper volume of oil is in the oil reservoir chambers.
5. Be certain the driving motor is properly lubricated and connected through suitable electrical overload devices.
6. With electrical power off and locked out to prevent accidental starting, rotate the blower shaft several times by hand to make sure the blower is rotating freely. Unevenness or tight spots are indicators of a condition that should be corrected before progressing.

7. Check motor rotation by momentarily pushing the START button and then checking the flow direction of the blower. Reverse the motor connections if the flow is in the wrong direction.

Carry out initial operation under “no load” conditions by opening all valves and venting the discharge to the atmosphere, if possible. Then, start the motor briefly, listen for unusual noises, and make sure the blower coasts freely to a stop. If no problem appears, repeat this check and let the motor run slightly longer. If any questions exist, investigate before proceeding.

Assuming all tests are satisfactory, the blower will now be ready for continuous full-load operation. During the first several days, check periodically to make sure all conditions remain acceptable and steady. These checks may be particularly important if the blower is part of a process system where conditions may vary. At the first opportunity, stop the blower and clean or remove the inlet filter. Also recheck leveling, coupling alignment or belt tension, and mounting bolts for tightness.

START-UP CHECKLIST

It is recommended that these start-up procedures be followed in sequence and checked off (☑) in the boxes provided in any of the following cases.

• During initial installation • After any shutdown period	• After maintenance work has been performed • After blower has been moved to a new location
DATES CHECKED:	☐ ☐ ☐
☐ ☐ ☐ ☐	Check the unit for proper lubrication. Proper oil level is critical. ***See Lubrication on page 15***. ***See Recommended Lubricants on page 42*** for information on acceptable lubricants for the product.
☐ ☐ ☐ ☐	Check the V-belt drive for proper belt alignment and tension.
☐ ☐ ☐ ☐	Carefully turn the rotors by hand to be certain they do not bind.

⚠ WARNING

Disconnect power. Make certain power is off and locked out before touching any rotating element of the blower, motor, or drive components.

☐☐☐☐	"Bump" the unit with the motor to check rotation (counterclockwise when facing the shaft) and to be certain it turns freely and smoothly.
☐☐☐☐	Start the unit and operate it for 30 minutes at no load. During this time, feel the cylinder for hot spots. If minor hot spots occur, ***see Troubleshooting on page 38.***
☐☐☐☐	Apply the load and observe the operation of the unit for 1 hour.
☐☐☐☐	If minor malfunctions occur, discontinue operation and ***see Troubleshooting on page 38***.

⚠ DANGER

The blower is not intended to be used with explosive products or in explosive environments. The blower is not intended to be used in applications that include hazardous and toxic gases. Consult the factory for support.

⚠ WARNING

Physical harm may occur if human body parts are in contact or exposed to the process vacuum. Assure that all connections are protected from human contact.

⚠ WARNING

If rated vacuum or pressure levels are exceeded, process fluids will migrate to other parts of the blower and system.

⚠ CAUTION

Do not touch hot surfaces.

Do not touch the blower while it is in operation and assure blower is cool when not in operation.

NOTICE

The upper temperature limits are not intended for continuous operation. Consult with factory for detailed information assistance.

STOPPING

⚠ CAUTION

Do not stop the blower if there are high outlet pressures in the outlet piping. Unload the outlet piping prior to shutting down the blower.

Stop the blower by turning off the motor. Isolate the blower from the vacuum system and vent the blower to the atmosphere.

RECOMMENDED SHUTDOWN PROCEDURE TO MINIMIZE RISK OF FREEZING OR CORROSION

When an air piping system has high humidity or moisture, water condensation can occur after the blower is shut down and it begins to cool. Condensation creates an environment favorable to corrosion of the iron internal surfaces and to ice formation in cold weather. Both conditions can close the operating clearances, causing the blower to fail upon future start-up.

The following shutdown procedure minimizes the risk of moisture condensation, corrosion, and freezing.

NOTICE

Care must be taken not to overload or overheat the blower during this procedure.

1. Isolate the blower from the moist system piping, allowing the blower to intake atmospheric air. Operate the blower under a slight load, allowing the blower to heat within safe limits. The heat generated by the blower will quickly evaporate residual moisture.

2. For carpet cleaning applications, after the work is completed, allow the blower to run 3 – 5 minutes with the suction hose and wand attached. The suction hose and wand will provide enough load to the blower to evaporate the moisture quickly.

3. For extended shutdown, inject a small amount of a light lubricating oil such as 3-in-One® or a spray lubricant such as WD-40® into the inlet of the blower just before shutdown *(3-in-One and WD-40 are registered trademarks of WD-40 Company)*. The lubricant will provide an excellent protective coating on the internal surfaces. If using a spray lubricant, take care to prevent the applicator tube from getting sucked into the blower. The applicator tube will damage the blower, likely to a degree where repair would be required.

4. If the blower is being taken out of commission for an extended period of time, ***see Long-Term Storage on page 29***.

07

MAINTENANCE

GENERAL

Regular inspection of the blower and its installation, along with complete checks on operating conditions, will pay dividends in added life and usefulness. Also, service the drive per the manufacturer's instructions and lubricate the coupling or check the belt drive tension. Use thermometers and gauges to make sure that blower operating temperature and pressure remain within allowed limits.

⚠ DANGER

The blower and parts may contain hazardous media. Assure that pump and parts are evacuated of hazardous media prior to servicing.

⚠ CAUTION

The electrical service must be isolated and de-energized prior to maintenance. Apply appropriate procedures to assure electrical supply is de-energized and cannot be inadvertently energized during maintenance.

Assure piping and product is isolated prior to maintenance of blower. Apply appropriate procedures to assure piping and product is isolated and that inadvertent opening of valves cannot occur during maintenance.

⚠ CAUTION

During routine maintenance, inspect and assure that guards are in place and secure.

Pay special attention to lubrication of timing gears and bearings according to the information in ***Lubrication on page 15***.

When a blower is taken out of service, it may require internal protection against rusting or corrosion. The need for such protection must be a matter of judgment based on existing conditions as well as length of downtime. Under atmospheric conditions producing rapid corrosion, protect the blower immediately. ***See Long-Term Storage on page 29***.

REGULAR MAINTENANCE

A well-designed maintenance program will add years of service to the blower.

Check a newly installed blower frequently during the first month of operation, especially lubrication. With the blower at rest, check the oil level in both the gear (drive) end and free (non-drive) end of the blower and add oil as needed. Complete oil changes are recommended every 1,000 – 1,200 operating hours, or more frequently depending on the type of oil and operating temperature. Also change the oil more frequently if pumping corrosive vapors or where excessive operating temperatures are encountered. The following is recommended as a minimum maintenance program.

DAILY	WEEKLY	MONTHLY
1. Check and maintain oil level, and add oil as necessary. 2. Check for unusual noise or vibration (***see Troubleshooting on page 38***).	1. Clean all air filters. A clogged air filter can seriously affect the efficiency of the blower and cause overheating and oil usage. 2. Check the relief valve to make sure it is operating properly.	1. Inspect the entire system for leaks. 2. Inspect the condition of the oil and change if necessary. 3. Check drive belt tension and tighten if necessary.

NOTICE

Oil levels should be checked every 24 hours of operation.

Proper oil drain schedules require oil be changed before the contaminant load becomes so great that the lubricating function of the oil is impaired or heavy disposition of suspended contaminants occurs. To check the condition of the oil, drain a sample into a clean container and check for the presence of water or solids. Slight discoloration of the oil should not necessitate an oil change.

SPARE PARTS

Should adjustments or replacement be needed, repairs can often be performed locally as described in this manual after obtaining the required parts. Personnel should have a good background of mechanical experience and be thoroughly familiar with the procedures outlined in this manual. For major repairs not covered in this manual, contact the nearest Tuthill Vacuum & Blower Systems service representative.

When ordering parts, supply the blower nameplate information, as well as the item number and parts description as per the parts lists and assembly drawings. Repair kits are available for all models. These kits contain all the seals, bearings, O-rings, locks, and special retaining screws necessary for an overhaul. For convenience when ordering parts, complete the **Operating Data Form** included on the inside back cover of this manual.

In developing a stock of spare parts, consider the following factors:

- The degree of importance in maintaining the blower in a “ready” condition
- The time lag in parts procurement
- Cost
- Shelf life (seals and O-rings)

FACTORY SERVICE AND REPAIR

With proper care, Tuthill Vacuum & Blower Systems blowers will give years of reliable service. The parts are machined to close tolerances and require special tools by mechanics who are skilled at this work. Should major repairs become necessary, contact the factory for the location of the nearest service facility.

NOTICE

Current regulations require Material Safety Data Sheet to be completed and forwarded to Tuthill Corporation on any unit being returned for any reason which has been handling or involved with hazardous gases or materials. This is for the protection of the employees of Tuthill Corporation who are required to perform service on this equipment. Failure to do so will result in service delays.

NOTICE

When returning a blower to the factory for repair, under warranty, please note the factory will not accept any unit that arrives without authorization. Contact the Service Department for return authorization.

LONG-TERM STORAGE

Any time the blower will be stored for an extended period of time, make sure it is protected from corrosion by following this procedure:

1. Spray the interior (lobes, housing, and end plates) with rust preventative. Repeat as conditions dictate and on an at least a yearly basis.
2. Fill both end covers completely full of oil.
3. Firmly attach a prominent tag stating that the end covers are full of oil and must be drained and refilled to proper levels before start-up.
4. Apply a rust-preventative grease to the drive shaft.
5. Spray all exposed surfaces, including the inlet and discharge flanges, with rust preventative.
6. Seal the inlet, discharge, and vent openings. It is not recommended that the blower be set in place, piped to the system, and allowed to remain idle for a prolonged amount of time. If any component is left open to the atmosphere, the rust preventative will escape and lose its effectiveness.
7. During storage, make sure the blower does not experience excessive vibration.
8. Attach a desiccant bag to one of the covers to prevent condensation from occurring inside the blower. Make sure any desiccant bag (or bags) is attached to the covers so that they will be removed before start-up of the blower.
9. Store the blower in an air conditioned and heated building if possible. If air conditioned and heated storage is not possible, make conditions as dry as possible.
10. If possible, rotate the drive shaft by hand at least monthly to prevent seals from setting in one position.

08

DISASSEMBLY AND REASSEMBLY

DISASSEMBLY OF BLOWER

⚠ WARNING

Before performing any repair or replacement, disconnect and lock out power.

With proper maintenance and lubrication, normal life expectancy for gears, bearings, and seals can be achieved. However, over time these parts must be repaired or replaced to maintain the efficiency of the blower. This section is written in a way that will allow you to completely disassemble the blower. The inspection of certain repairable or replaceable parts is referred to at the point of disassembly where these parts are exposed. If repair or replacement is deemed necessary at any point of inspection, appropriate instruction is given to achieve.

1. Remove the oil drain plugs in the bottom of the end covers and drain the oil.
2. Remove eight cap screws and remove the gear cover.

NOTE: It may be necessary to tap the sides with a mallet or wooden block to break the seal joint.

Gears are not exposed for visual inspection prior to disassembly.

Inspect the gears for the following:

- Broken teeth
- Chipped teeth
- Uneven wear
- Excessive wear
- Any other abnormalities

3. Position the blower with the drive gear on the left when facing the gears. Remove the socket-head screws and washers.
4. Align the timing marks, count 3 teeth up, and place reference marks on the gears (see ***Figure 8-1***).

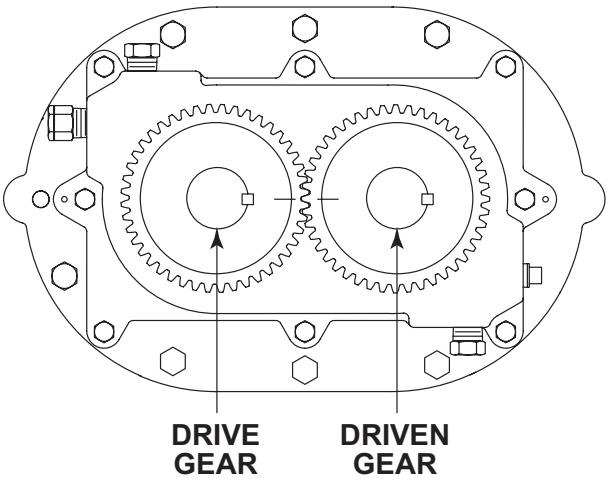

Figure 8-1 – Timing Marks Matched

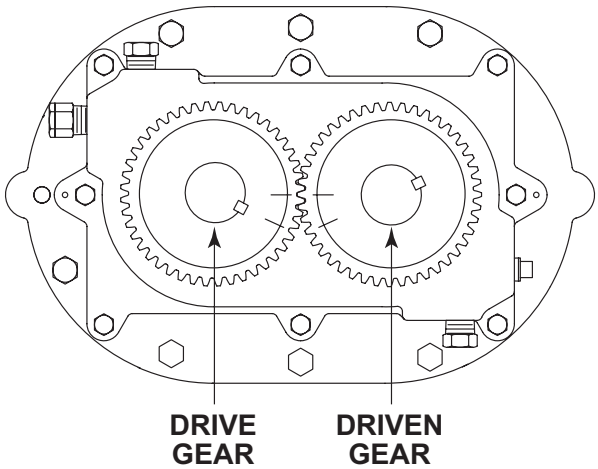

Figure 8-2 – Timing Marks Advanced 3 Teeth (Reference Marks Aligned)

5. Align the reference marks (see ***Figure 8-2***).
6. Use a puller to remove the driven gear. A bar puller or jaw puller (see ***Figure 8-3***) can be used.

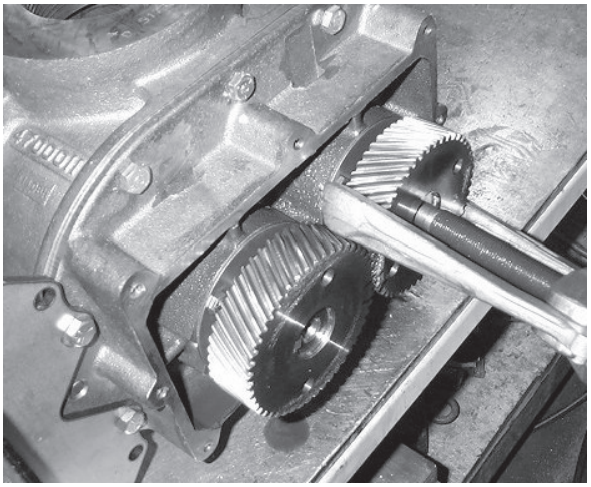

Figure 8-3 – Pulling Driven Gear with Jaw Puller or Bar Puller

7. Remove the drive gear using a bar puller or jaw puller (see ***Figure 8-4***).

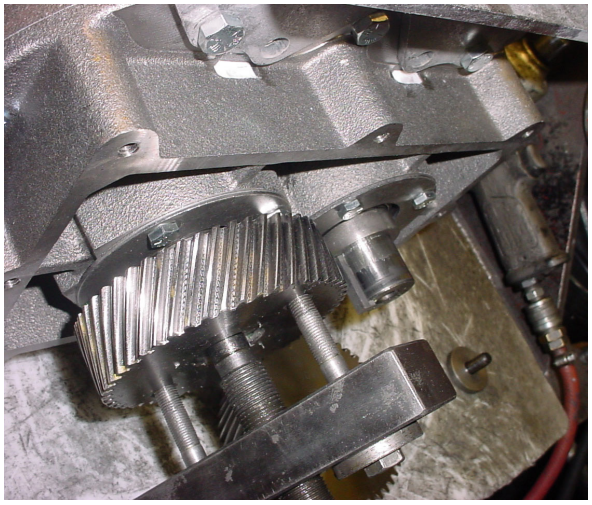

Figure 8-4 – Pulling Driven Gear with Bar Puller

NOTE: If the unit becomes locked up, switch gears.

8. Remove the shim and spacer, and note from which shaft the shim is removed.
9. Turn the blower around and remove the 8 cap screws securing the drive end cover.
10. Remove the cover.
11. Loosen the set screws on the oil slingers and remove the oil slingers from the rotor shafts (see ***Figure 8-5***).

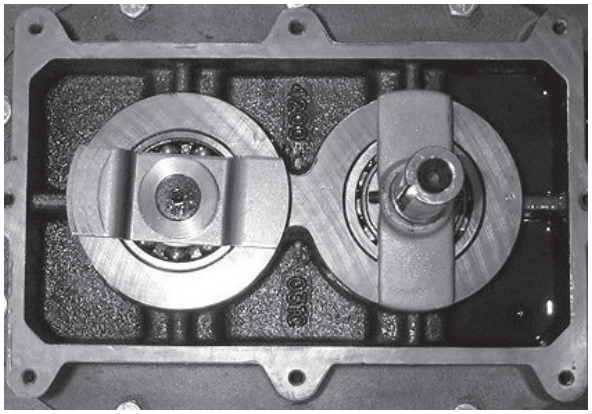

Figure 8-5 – Set Screws for Slingers

12. Remove the 10 cap screws that secure the drive end plate to the housing.

13. Use a jaw puller or jackscrews to remove the drive end plate (see ***Figure 8-6*** and ***Figure 8-7***).

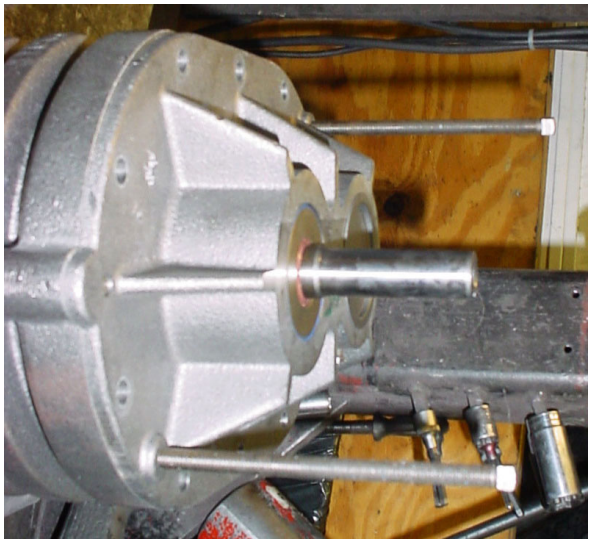

Figure 8-6 – Removing Drive End End Plate Using Jackscrews (21 Series)

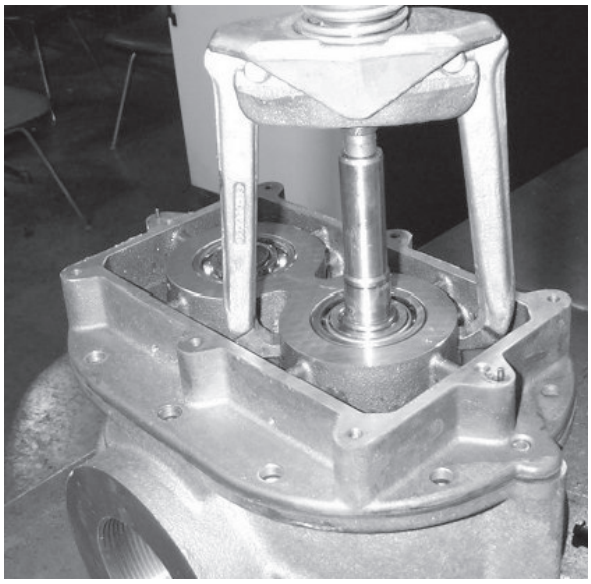

Figure 8-7 – Pulling Drive End Plate (22 Series)

14. Press the rotors out of the free (non-drive) end plate in press if available. If press is not available, support the end plate and rotors in the housing. Block up the housing and use a soft mallet to drive the rotors out (see ***Figure 8-8***). A jaw-type puller can also be used.

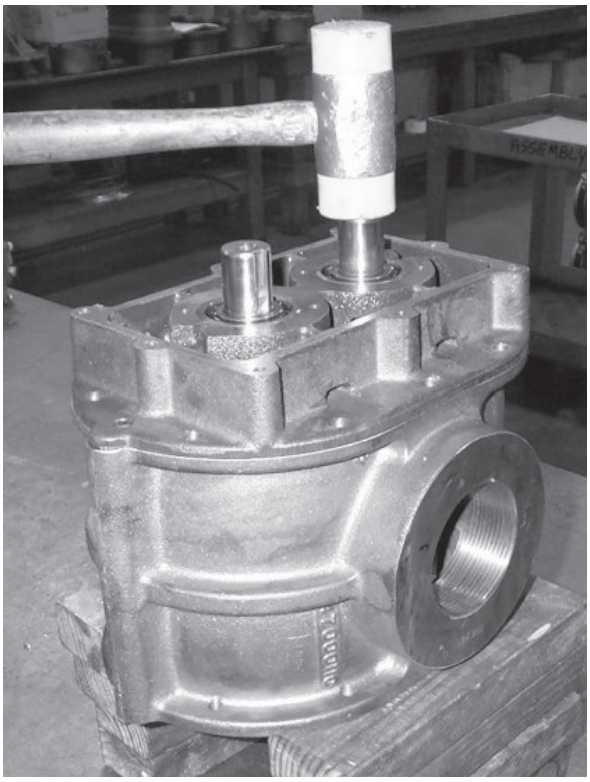

Figure 8-8 – Driving Rotors Out Using Soft Mallet

15. Using a tube or round bar of a slightly smaller diameter than the shaft clearance holes in the end plates, tap the bearings out of the end plates. Remove the bearing retainers before knocking out the bearings (see ***Figure 8-9***).

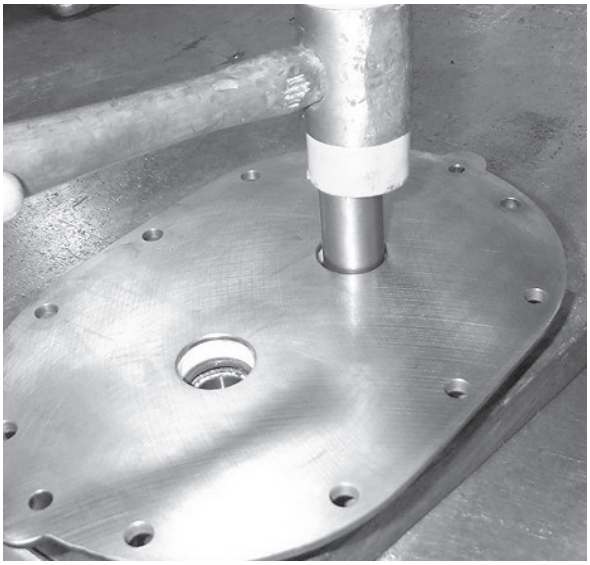

Figure 8-9 – Tapping Bearings Out of End Plates

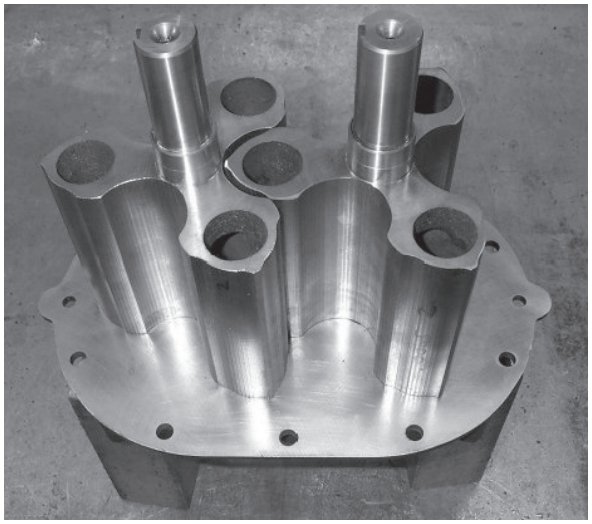

Figure 8-10 – Rotors Assembled on Drive End Plate (Model 4000 with Tri-Lobe Rotors Shown)

16. Remove the seals from both end plates with a punch or dull chisel. The seals will be damaged during removal and must be replaced. Inspect all parts for wear or damage.

17. Clean and inspect all parts for burrs, and polish the seal journals with at least 320-grit emery or crocus cloth.

REASSEMBLY OF BLOWER

After thoroughly cleaning the seal and bearing bores of both end plates, apply a thin coat of sealant on the outside diameter of the new seals and press them into the end plate using a tool that will bear on the outer edge of the seal. The spring side of the seal should be facing you. Apply a thin coat of grease to the seal lip.

See ***Special Tool Drawings on page 44*** for drawings and dimensions of the seal and bearing pressing tools.

Using the drive end plate as a fixture, support the plate high enough so the input shaft of the drive rotor clears the assembly surface (see ***Figure 8-10***). Place the rotors in the fixture with the drive rotor to the left (see ***Figure 8-10*** and ***Figure 8-14***).

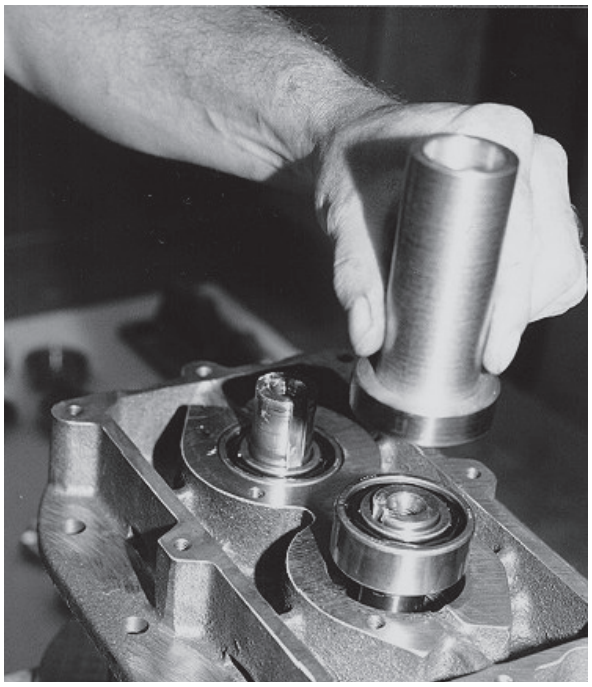

Figure 8-11 – Tapping Bearings into End Plates

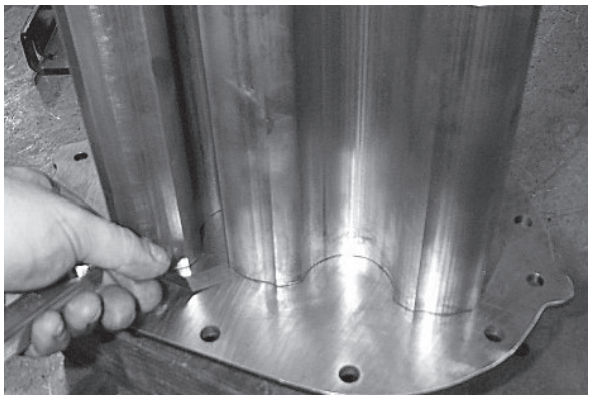

Figure 8-12 – Checking Gear End Clearances

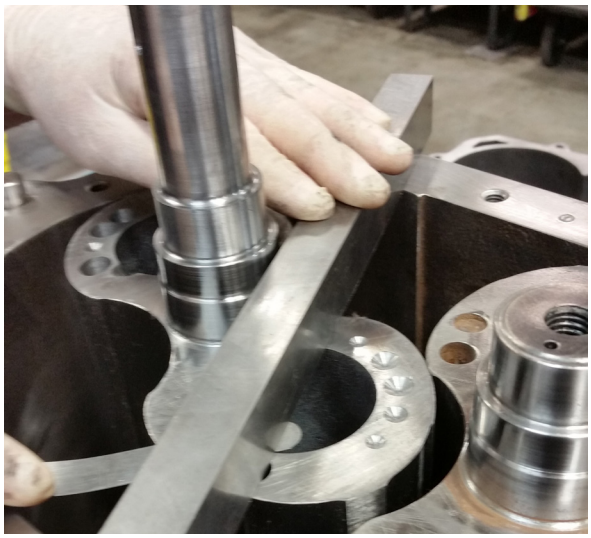

Figure 8-13 – Check Drive End Clearances

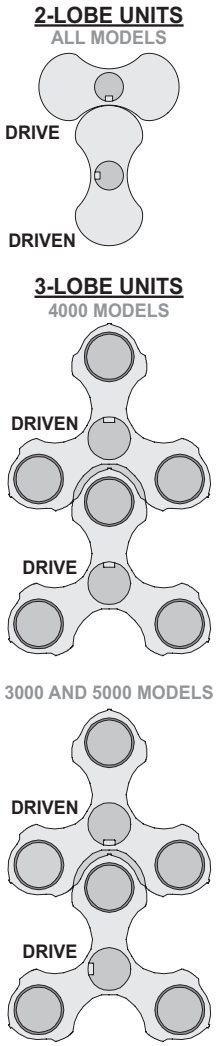

Figure 8-14 – Rotor Keyway Positions

1. Place end plate on rotors.
2. Apply a thin coat of lubricant on the rotor shafts and the inner race of the bearings. Tap the bearings into place using a tube with a flanged end that will contact both the inner and outer bearing races (see ***Figure 8-11***).
3. Install bearing retainers to both bearings.
4. Check clearances between the end of the rotors and the face of the end plate. ***See Assembly Clearances on page 40*** for proper clearances for your model blower.

5. If clearances check OK, put a spacer on each shaft. Timing shims that were removed should be put back on the shaft from which they were removed.

6. Add keys to keyways.

7. Lubricate shafts and bores on gears. Begin by pressing on the DRIVE gear. This will be pressed on the drive rotor, which is to the left.

8. Start the driven gear on the shaft and align the reference timing marks and press gear on. Lock gears in place with socket head screw and washer. Turn assembly over and rest the unit on the socket head screws and washers on the gear end, securing the unit with support blocks.

9. Set dowel pins in housing and position housing over the rotors and fasten with cap screws. Check drive end clearance (see ***Figure 8-13***). A depth mic can be used.

10. Set on drive end plate and fasten with cap screws.

11. Press seals into drive endplate.

12. Lubricate shafts and bearings. Install the ball bearing on the driven rotor and the roller bearing on the input shaft. Install oil slingers to appropriate rotors.

NOTE: Oil slingers are on the Splash Lubrication/ Air Service models only. The Grease Lubrication/Air Service blowers will not have oil slingers.

13. Apply a bead of a good quality RTV silicone sealant to the inner surface of the drive end cover that mates to the drive end plate. Install drive end cover and drive shaft seal.

14. Install any removed plugs and sight glasses, and replace breather if required.

⚠ WARNING

Keep hands and loose clothing away from lobes and gears.

Adjusting Rotor Interlobe Clearance

1. Use feeler gauges to take interlobe readings, and record them on each side of housing as indicated in ***Figure 8-15***. As shim is removed or added behind the helical gear, the gear rotates as it is moved in or out and the driven rotor turns with it, thus changing the clearance between rotor lobes.

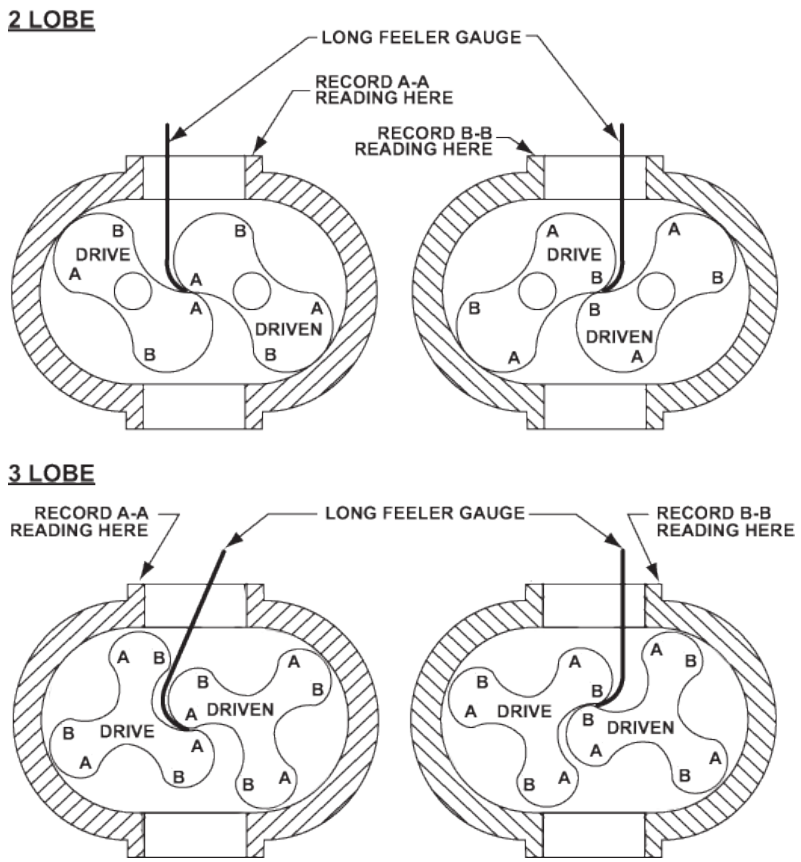

Figure 8-15 – Checking Rotor Interlobe Clearances

2. Changing the shim thickness will change the rotor lobe clearance.

3. To determine the amount of shim to add or remove, subtract the smaller value from the larger value.

<u>*EXAMPLE:*</u> Referring to ***Figure 8-15***, check the clearance at AA (right-hand reading) and BB (left-hand reading). If the AA reading is 0.009 in. (0.23 mm) and the BB reading 0.003 in. (0.08 mm), adjust by removing 0.006 in. (0.15 mm) shims from the driven rotor. The readings will change one half the amount removed: 0.003 in. (0.08 mm). AA should then read 0.006 in. (0.15 mm) and BB should read 0.006 in. (0.15 mm). The final readings should be within 0.002 in. (0.05 mm) of each other.

MODEL	CHANGE	SHIM CHANGE
2000	1	1
3000/4000/5000	1	1
6000	1	1.5
7000	1	1.8

NOTE: Both the drive and driven gears can be shimmed.

Lubrication, Final Assembly and Mounting

1. Apply a bead of a high-quality RTV silicone sealant to the inner surface of the gear end cover that mates to the gear end plate. Install the gear end cover with cap screws and tighten evenly.

2. Fill both end covers with oil. ***See Lubrication on page 15*** for the filling procedure, and see ***Recommended Lubricants on page 42*** for recommended lubricants.

3. To make sure the blower has not been distorted during mounting in the installation, turn the lobes by hand to make sure they are not making contact before connecting to the driver.

09

TROUBLESHOOTING

Although Tuthill Vacuum & Blower Systems blowers are well designed and manufactured, problems may occur due to normal wear and the need for readjustment. The following chart lists symptoms that may occur along with probable causes and remedies.

SYMPTOM	PROBABLE CAUSE	REMEDIES
Loss of oil	Gear housing not tightened properly	Tighten gear housing bolts.
	Lip seal failure	Disassemble and replace lip seal.
	Insufficient sealant	Remove gear housing and replace sealant. ***See Disassembly of Blower on page 30***.
	Loose drain plug	Tighten drain plug.
Excessive bearing or gear wear	Improper lubrication	Correct oil level. Replace dirty oil. ***See Lubrication on page 15***.
	Excessive belt tension	Check belt manufacturer's specifications for tension and adjust accordingly.
	Coupling misalignment	Check carefully. Re-align if necessary.
Lack of volume	Slipping belts	Check belt manufacturer's specifications for tension and adjust accordingly.
	Worn lobe clearances	Check for proper clearances. ***See Assembly Clearances on page 40***.
	Speed too low	Increase blower speed within limits.
	Obstruction in piping	Check system to ensure an open flow path.
Knocking	Blower out of time	Re-time.
	Distortion due to improper mounting or pipe strains	Check mounting alignment and relieve pipe strains.
	Excessive pressure differential	Reduce to manufacturer's recommended pressure. Examine relief valve and reset if necessary.
	Worn gears	Replace timing gears. ***See Disassembly of Blower on page 30***.

SYMPTOM	PROBABLE CAUSE	REMEDIES
Excessive blower temperature	Too much or too little oil in gear reservoir	Check oil level. ***See Lubrication on page 15***.
	Too low operating speed	Increase blower speed within limits.
	Clogged filter or silencer	Remove cause of obstruction.
	Excessive pressure differential	Reduce pressure differential across the blower.
	Elevated inlet temperature	Reduce inlet temperature.
	Worn lobe clearances	Check for proper clearances. ***See Assembly Clearances on page 40***.
Rotor end or tip drag	Insufficient assembled clearances	Correct clearances. ***See Assembly Clearances on page 40***.
	Case or frame distortion	Check mounting and pipe strain.
	Excessive operating pressure	Reduce pressure differential.
	Excessive operating temperature	Reduce pressure differential or reduce inlet temperature.
Vibration	Belt or coupling misalignment	Check carefully. Re-align if necessary.
	Lobes rubbing	Check cylinder for hot spots, and then check for lobe contact at these points. Correct clearances. ***See Assembly Clearances on page 40***.
	Worn bearings or gears	Check condition of gears and bearings. Replace if necessary.
	Unbalanced or rubbing lobes	Possible build-up on casing or lobes, or inside lobes. Remove build-up and restore clearances.
	Driver or blower loose	Check mounting and tighten if necessary.
	Piping resonance	Check pipe supports, check resonance of nearby equipment, and check foundation.

10

ASSEMBLY CLEARANCES

MODEL	LOBES TO END PLATES			INTERLOBE	LOBE TO CASING	
	DRIVE END	GEAR END	TOTAL		TIP-DOWEL	TIP-PORT
2002	0.004 – 0.007 in. (0.10 – 0.18 mm)	0.003 – 0.005 in. (0.08 – 0.13 mm)	0.008 – 0.011 in. (0.20 – 0.28 mm)	0.005 – 0.009 in. (0.13 – 0.23 mm)	0.002 – 0.004 in. (0.05 – 0.10 mm)	0.003 – 0.006 in. (0.08 – 0.15 mm)
2004	0.004 – 0.007 in. (0.10 – 0.18 mm)	0.003 – 0.005 in. (0.08 – 0.13 mm)	0.008 – 0.011 in. (0.20 – 0.28 mm)	0.005 – 0.009 in. (0.13 – 0.23 mm)	0.002 – 0.004 in. (0.05 – 0.10 mm)	0.003 – 0.006 in. (0.08 – 0.15 mm)
3002	0.004 – 0.007 in. (0.10 – 0.18 mm)	0.003 – 0.005 in. (0.08 – 0.13 mm)	0.008 – 0.012 in. (0.20 – 0.30 mm)	0.006 – 0.012 in. (0.15 – 0.30 mm)	0.002 – 0.005 in. (0.05 – 0.13 mm)	0.004 – 0.007 in. (0.10 – 0.18 mm)
3003	0.005 – 0.008 in. (0.13 – 0.20 mm)	0.003 – 0.005 in. (0.08 – 0.13 mm)	0.009 – 0.012 in. (0.23 – 0.30 mm)	0.010 – 0.014 in. (0.25 – 0.36 mm)	0.002 – 0.005 in. (0.05 – 0.13 mm)	0.004 – 0.007 in. (0.10 – 0.18 mm)
3006	0.006 – 0.010 in. (0.15 – 0.25 mm)	0.003 – 0.005 in. (0.08 – 0.13 mm)	0.010 – 0.013 in. (0.25 – 0.33 mm)	0.010 – 0.014 in. (0.25 – 0.36 mm)	0.002 – 0.005 in. (0.05 – 0.13 mm)	0.004 – 0.007 in. (0.10 – 0.18 mm)
4002	0.004 – 0.009 in. (0.10 – 0.23 mm)	0.004 – 0.006 in. (0.10 – 0.15 mm)	0.009 – 0.013 in. (0.23 – 0.33 mm)	0.012 – 0.016 in. (0.30 – 0.41 mm)	0.003 – 0.006 in. (0.08 – 0.15 mm)	0.005 – 0.008 in. (0.13 – 0.20 mm)
4005	0.005 – 0.010 in. (0.12 – 0.25 mm)	0.004 – 0.006 in. (0.10 – 0.15 mm)	0.010 – 0.014 in. (0.25 – 0.36 mm)	0.012 – 0.016 in. (0.30 – 0.41 mm)	0.003 – 0.006 in. (0.08 – 0.15 mm)	0.005 – 0.008 in. (0.13 – 0.20 mm)
4007	0.005 – 0.010 in. (0.12 – 0.25 mm)	0.004 – 0.006 in. (0.10 – 0.15 mm)	0.010 – 0.014 in. (0.25 – 0.36 mm)	0.012 – 0.016 in. (0.30 – 0.41 mm)	0.003 – 0.006 in. (0.08 – 0.15 mm)	0.005 – 0.008 in. (0.13 – 0.20 mm)
5003	0.004 – 0.009 in. (0.10 – 0.23 mm)	0.004 – 0.006 in. (0.10 – 0.15 mm)	0.009 - 0.013 in. (0.29 - 0.33 mm)	0.014 – 0.018 in. (0.36 – 0.46 mm)	0.003 – 0.006 in. (0.08 – 0.15 mm)	0.005 – 0.008 in. (0.13 – 0.20 mm)
5006	0.005 – 0.010 in. (0.13 – 0.25 mm)	0.004 – 0.006 in. (0.10 – 0.15 mm)	0.010 – 0.014 in. (0.25 – 0.36 mm)	0.014 – 0.018 in. (0.36 – 0.46 mm)	0.003 – 0.006 in. (0.08 – 0.15 mm)	.005 – .008 in. (0.13 – 0.20 mm)
5009	0.005 – 0.010 in. (0.13 – 0.25 mm)	0.004 – 0.006 in. (0.10 – 0.15 mm)	0.010 – 0.014 in. (0.25 – 0.36 mm)	0.014 – 0.018 in. (0.36 – 0.46 mm)	0.003 – 0.006 in. (0.08 – 0.15 mm)	0.005 – 0.008 in. (0.13 – 0.20 mm)
6005	0.008 – 0.013 in. 0.20 – 0.33 mm)	0.005 – 0.007 in. (0.12 – 0.18 mm)	0.015 – 0.019 in. (0.38 – 0.48 mm)	0.010 – 0.014 in. (0.25 – 0.36 mm)	0.004 – 0.007 in. (0.10 – 0.18 mm)	0.006 – 0.009 in. (0.15 – 0.23 mm)
6008	0.008 - 0.013 in. (0.20 - 0.33 mm)	0.005 – 0.007 in. (0.12 – 0.18 mm)	0.015 – 0.019 in. (0.38 – 0.48 mm)	0.010 – 0.014 in. (0.25 – 0.36 mm)	0.004 – 0.007 in. (0.10 – 0.18 mm)	0.006 – 0.009 in. (0.15 – 0.23 mm)
6015	0.009 – 0.014 in. (0.23 – 0.36 mm)	0.005 – 0.007 in. (0.13 – 0.18 mm)	0.016 – 0.020 in. (0.40 – 0.50 mm)	0.010 – 0.014 in. (0.25 – 0.36 mm)	0.004 – 0.007 in. (0.10 – 0.18 mm)	0.006 – 0.009 in. (0.15 – 0.23 mm)
7006	0.008 – 0.012 in. (0.20 – 0.30 mm)	0.005 – 0.007 in. (0.13 – 0.18 mm)	0.015 – 0.018 in. (0.38 – 0.46 mm)	0.012 – 0.016 in. (0.30 – 0.41 mm)	0.004 – 0.007 in. (0.10 – 0.18 mm)	0.006 – 0.009 in. (0.15 – 0.23 mm)
7011	0.010 – 0.014 in. (0.25 – 0.36 mm)	0.005 – 0.007 in. (0.13 – 0.18 mm)	0.017 – 0.020 in. (0.43 – 0.51 mm)	0.012 – 0.016 in. (0.30 – 0.41 mm)	0.004 – 0.007 in. (0.10 – 0.18 mm)	0.006 – 0.009 in. (0.15 – 0.23 mm)
7018	0.010 – 0.014 in. (0.25 – 0.36 mm)	0.005 – 0.007 in. (0.13 – 0.18 mm)	0.017 – 0.020 in. (0.43 – 0.51 mm)	0.012 – 0.016 in. (0.30 – 0.41 mm)	0.004 – 0.007 in. (0.10 – 0.18 mm)	0.006 – 0.009 in. (0.15 – 0.23 mm)

11

TORQUE CHART

Data shown represents “wet” torque values.

PART DESCRIPTION	TORQUE
CAP SCREW 10-32UNF	4 ft-lb (5 N-m)
CAP SCREW 1/4"-20UNC GR5	8 ft-lb (10 N-m)
CAP SCREW 5/16"-18UNC GR5	15 ft-lb (20 N-m)
CAP SCREW 3/8"-16UNC GR5	33 ft-lb (45 N-m)
CAP SCREW 1/2"-13UNC GR5	78 ft-lb (106 N-m)
CAP SCREW 5/8"-14UNC GR5	123 ft-lb (167 N-m)
CAP SCREW 3/4"-10UNC GR5	260 ft-lb (350 N-m)

12

RECOMMENDED LUBRICANTS

RECOMMENDED LUBRICANTS FOR ROTARY BLOWERS AND VACUUM BOOSTERS

RECOMMENDED MINERAL BASED LUBRICANTS				
AMBIENT TEMPERATURE	**SHELL**	**CITGO**	**CHEVRON**	**EXXONMOBIL**
0° to 32°F (-18° to 0°C)	TELLUS® S2 M 68 (ISO 68)	A/W 68 (ISO 68)	RANDO HD 68 (ISO 68)	DTE HEAVY MEDIUM (ISO 68)
32° to 90°F (0° to 32°C)	TELLUS® S2 M 100 (ISO 100)	A/W 100 (ISO 100)	RANDO HD 100 (ISO 100)	DTE HEAVY (ISO 100)
90° to 120°F* (32° to 50°C)	—	A/W 150 (ISO 150)	RANDO HD 150 (ISO 150)	DTE EXTRA HEAVY (ISO 150)

RECOMMENDED SYNTHETIC BASED LUBRICANTS**			
AMBIENT TEMPERATURE	**TUTHILL**	**EXXONMOBIL**	**SHELL**
0° to 32°F (-18° to 0°C)	**PneuLube™** (ISO 100)	SHC 626 (ISO 68)	MORLINA® S4 B 68 (ISO 68)
32° to 90°F (0° to 32°C)		SHC 627 (ISO 100)	MORLINA® S4 B 100 (ISO 100)
90° to 120°F* (32° to 50°C)		SHC 629 (ISO 150)	MORLINA® S4 B 150 (ISO 150)

RECOMMENDED MINERAL BASED, FOOD GRADE LUBRICANTS		
AMBIENT TEMPERATURE	**LUBRICANT MEETING U.S. FDA REGULATION 21 CFR 178.3570 GOVERNING PETROLEUM PRODUCTS WHICH MAY HAVE INCIDENTAL CONTACT WITH FOOD, AND USDA H1 REQUIREMENTS**	**LUBRICANT MEETING U.S. FDA REGULATIONS 21 CFR 172.878 AND 178.3620(A) FOR DIRECT AND INDIRECT FOOD CONTACT**
0° to 32°F (-18° to 0°C)	CITGO CLARION® A/W 68 (ISO 68)	CITGO CLARION® 350 FOOD GRADE (ISO 68)
32° to 90°F (0° to 32°C)	CITGO CLARION® A/W 100 (ISO 100)	CONSULT FACTORY
90° to 120°F* (32° to 50°C)	CONSULT FACTORY	CONSULT FACTORY

RECOMMENDED SYNTHETIC BASED, FOOD GRADE LUBRICANTS		
AMBIENT TEMPERATURE	**LUBRICANT MEETING U.S. FDA REGULATION 21 CFR 178.3570 GOVERNING PETROLEUM PRODUCTS WHICH MAY HAVE INCIDENTAL CONTACT WITH FOOD, AND USDA H1 REQUIREMENTS**	**LUBRICANT MEETING U.S. FDA REGULATIONS 21 CFR 172.878 AND 178.3620(A) FOR DIRECT AND INDIRECT FOOD CONTACT**
0° to 32°F (-18° to 0°C)	**PneuLube™ FG** (ISO 100)	CONSULT FACTORY
32° to 90°F (0° to 32°C)		
90° to 120°F* (32° to 50°C)		

RECOMMENDED LUBRICANTS FOR M-D VACUUM BOOSTERS
REQUIREMENTS
• Suitable for high vacuum service • 100 cSt @ 40°C • Vapor pressure of 1 micron or less @ 70°F (21°C) • Straight mineral (no additives) or PAO synthetic oil

RECOMMENDED GREASE FOR COMPETITOR® PLUS BLOWERS:	
TUTHILL	**CITGO**
Tuthill PneuLube™ NLGI #2 premium grade, petroleum base lithium grease.	**For food grade requirements:** Use Citgo Clarion® Food Grade HTEP grease, NLGI No. 2 grade. It meets all requirements of FDA Regulation 21 CFR 178.3570 (the former USDA H-1 approval requirements) for lubricants having incidental contact with food.

* For higher ambient temperatures, please consult the factory.

** Blowers used in oxygen-enriched service should use only Castrol Brayco 1726 Plus non-flammable, PFPE synthetic lubricant. Blowers used in hydrogen service should use only PneuLube synthetic oil. Tuthill Vacuum & Blower Systems cannot accept responsibility for damage to seals, O-rings and gaskets caused by use of synthetic lubricants not recommended by Tuthill Vacuum and Blower Systems.

13

SPECIAL TOOL DRAWINGS

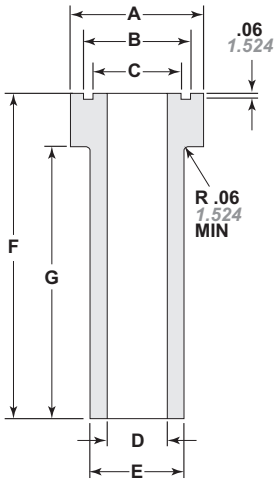

MODEL	A ±.001 ± 0.0254	B ±.005 ± 0.127	C ±.005 ± 0.127	D ±.005 ± 0.127	E ±.005 ± 0.127	F ±.005 ± 0.127	G ±.005 ± 0.127
2000	1.560 *39.624*	1.27 *32.258*	.98 *24.892*	.70 *17.78*	1.10 *27.94*	3.50 *88.9*	3.00 *76.2*
3000	2.035 *51.689*	1.70 *43.18*	1.335 *33.909*	1.015 *25.781*	1.415 *35.941*	3.75 *95.25*	3.00 *76.2*
4000	2.425 *61.595*	2.02 *51.308*	1.61 *40.894*	1.21 *30.734*	1.61 *40.894*	4.50 *114.3*	3.75 *95.25*
5000	2.820 *71.628*	2.42 *61.468*	1.81 *45.974*	1.41 *35.814*	1.81 *45.974*	5.00 *127*	4.25 *107.95*
6000	3.135 *79.629*	2.73 *69.342*	2.00 *50.8*	1.605 *40.767*	2.00 *50.8*	6.25 *158.75*	5.50 *139.7*
7000	3.525 *89.535*	2.98 *75.692*	2.46 *62.484*	1.605 *40.767*	2.00 *50.8*	6.25 *158.75*	5.50 *139.7*

Figure 13-1 – Bearing Pressing Tool (for All Series)

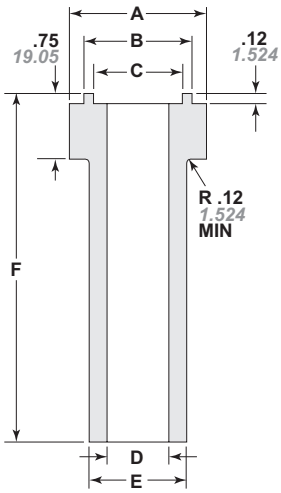

MODEL	A ±.001 ± 0.0254	B ±.005 ± 0.127	C ±.005 ± 0.127	D ±.005 ± 0.127	E ±.005 ± 0.127	F ±.005 ± 0.127
2000	1.560 *39.624*	1.24 *31.496*	1.04 *26.416*	.70 *17.78*	1.10 *27.94*	4.00 *101.6*
3000	2.035 *51.689*	1.74 *44.196*	1.54 *39.116*	1.015 *25.781*	1.415 *35.941*	4.37 *110.99*
4000	2.425 *61.595*	1.865 *47.371*	1.665 *42.291*	1.21 *30.734*	1.61 *40.894*	5.25 *133.35*
5000	2.820 *71.628*	2.427 *61.645*	2.227 *56.565*	1.41 *35.814*	1.81 *45.974*	5.68 *144.272*
6000	3.135 *79.629*	2.74 *69.596*	2.54 *64.516*	1.605 *40.767*	2.00 *50.8*	7.00 *177.8*
7000	3.525 *89.535*	2.99 *75.946*	2.79 *70.866*	1.605 *40.767*	2.00 *50.8*	7.00 *177.8*

Figure 13-2 – Seal Pressing Tool (for 21 and 22 Series)

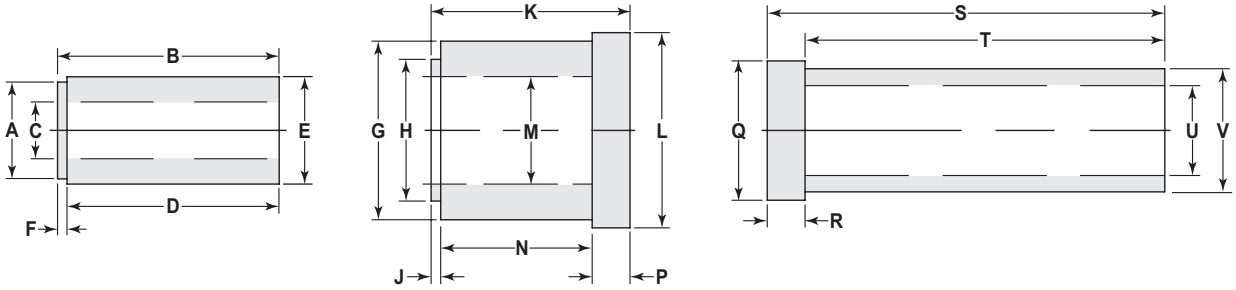

MODEL	A	B	C	D	E	F	G	H	J	K
3000	1.250 *31.75*	2.819 *71.603*	0.750 *19.05*	2.750 *69.85*	1.248 *31.699*	0.125 *3.175*	2.044 *51.918*	1.749 *44.425*	0.100 *2.54*	2.600 *66.04*
4000	1.397 *35.484*	2.927 *74.346*	0.750 *19.05*	2.802 *71.171*	1.417 *35.992*	0.125 *3.175*	2.438 *61.925*	1.871 *47.523*	0.127 *3.226*	2.627 *66.726*
5000	1.722 *43.739*	3.0695 *77.965*	0.750 *19.05*	2.8495 *72.377*	1.735 *44.069*	0.220 *5.588*	2.832 *71.933*	2.434 *61.824*	0.1745 *4.432*	2.6745 *67.932*

MODEL	L	M	N	P	Q	R	S	T	U	V
3000	2.183 *55.448*	1.253 *31.826*	2.000 *50.8*	0.500 *12.7*	1.749 *44.425*	0.500 *12.7*	4.275 *108.585*	3.775 *95.885*	0.987 *25.070*	1.600 *40.64*
4000	2.578 *65.481*	1.420 *36.068*	2.000 *50.8*	0.500 *12.7*	1.840 *46.736*	0.500 *12.7*	5.250 *133.35*	4.750 *120.65*	1.186 *30.124*	1.700 *43.18*
5000	2.832 *71.933*	1.738 *44.145*	2.000 *50.8*	0.500 *12.7*	2.230 *56.642*	0.500 *12.7*	5.500 *139.7*	5.000 *127*	1.383 *35.128*	2.090 *53.086*

Figure 13-3 – Seal Installation Tools (for 23 Series)

NOTE: All dimensions are shown in inches and millimeters.

PARTS LIST

Parts List for Model CP Series – Grease Lubrication / Air Service

ITEM NO.	PART DESCRIPTION	QTY
1	Housing	1
2	Mounting Foot	2
2	Mounting Foot	2
3	Drive End Plate	1
4	Gear End Plate	1
5	Gear Cover	1
6	Drive Rotor	1
7	Driven Rotor	1
8	Gear Set	1
9	Dowel Pin	4
10	Cover Grease	1
11	Bearing	1
12*	Bearing	1
13	Bearing	2
15	Screw, Hex Head	26
16	Screw, Hex Head	8
17	Screw, Hex Head	8
18	Pipe Plug	6
18	Magnetic Plug	3
19	Relief Fitting	2
20	Grease Fitting	2
22	Bearing Retainer	2
23	Lip Seal	1
24	Lip Seal	4
25	Screw, Hex Head	12
26	Washer	2
27	Breather	1
28	Spacer	2
29	Cap Screw	2
30	Shim	6
30	Shim	6
30	Shim	4
31	Key Gear	2

ITEM NO.	PART DESCRIPTION	QTY
42*	Nameplate	1
45*	Lifting Lug	2
47*	Vent Hole Insert	8

* Not shown

NOTES:

- QUANTITIES SHOWN ARE MAXIMUM VALUES. QUANTITIES MAY VARY BETWEEN BLOWER.

PARTS KITS ARE AVAILABLE. CONSULT AUTHORIZED REPRESENTATIVE FOR PART NUMBERS.

Parts List for Model CP Series – Splash Lubrication / Air Service

ITEM NO.	PART DESCRIPTION	QTY
1	Housing	1
2	Mounting Foot	2
2	Mounting Foot	2
3	Drive End Plate	1
4	Gear End Plate	1
5	Cover BE	1
6	Drive Rotor	1
7	Driven Rotor	1
8	Gear Set	1
9	Dowel Pin	4
10	Cover DE	1
11	Bearing	1
12	Bearing	1
13	Bearing Ball	2
15	Screw, Hex Head	26
16	Screw, Hex Head	16
17	Screw, Hex Head	8
18	Pipe Plug	10
18	Magnetic Plug	2
21	Oil Sight Glass	2
22	Bearing Retainer	2
23	Lip Seal	1
24	Lip Seal	4
25	Screw, Hex Head	12
26	Washer	3
27	Breather	2
28	Spacer	2
29	Cap Screw	3
30	Shim	6
30	Shim	6
30	Shim	4
31	Key Gear	2
42*	Nameplate	1
44	Roll Pin	2

ITEM NO.	PART DESCRIPTION	QTY
45*	Lifting Lug	2
46*	Slinger	2
47*	Vent Hole Insert	4
48*	Roll Pin	2
49*	Vent Hole Insert	8

* Not shown

NOTES:

- QUANTITIES SHOWN ARE MAXIMUM VALUES. QUANTITIES MAY VARY BETWEEN BLOWER.

PARTS KITS ARE AVAILABLE. CONSULT AUTHORIZED REPRESENTATIVE FOR PART NUMBERS.

ASSEMBLY DRAWINGS

Cutaway Drawing for Grease Lubrication / Air Service

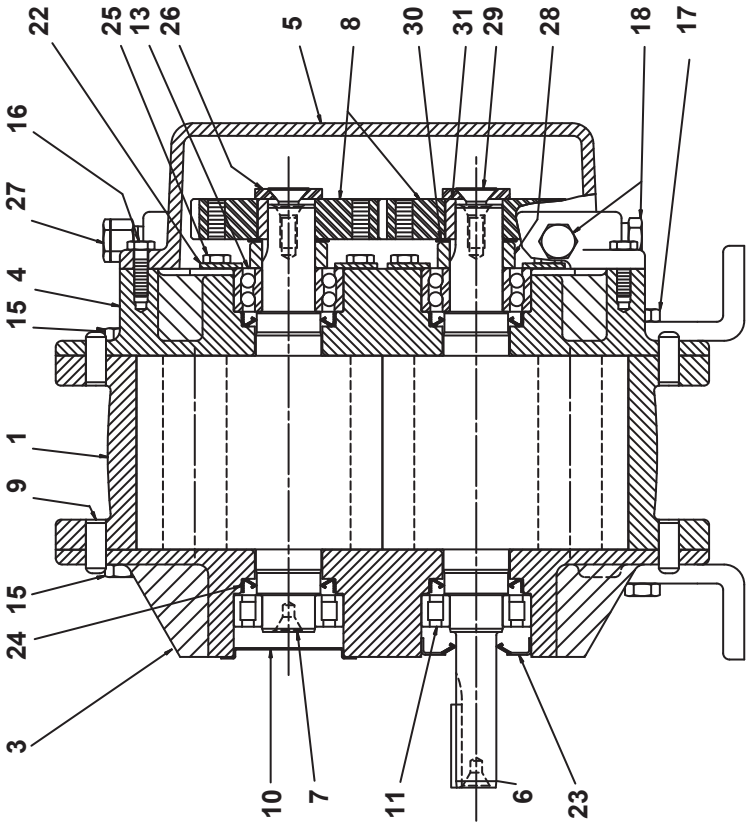

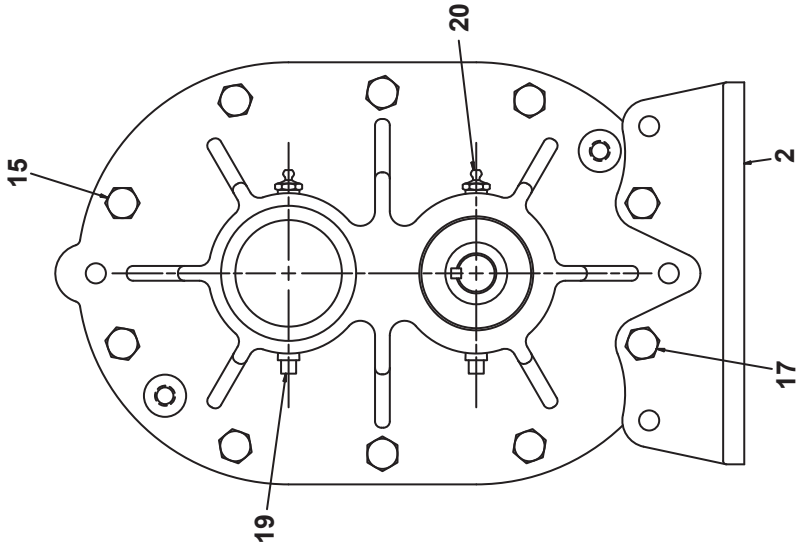

Cutaway Drawing for Splash Lubrication / Air Service

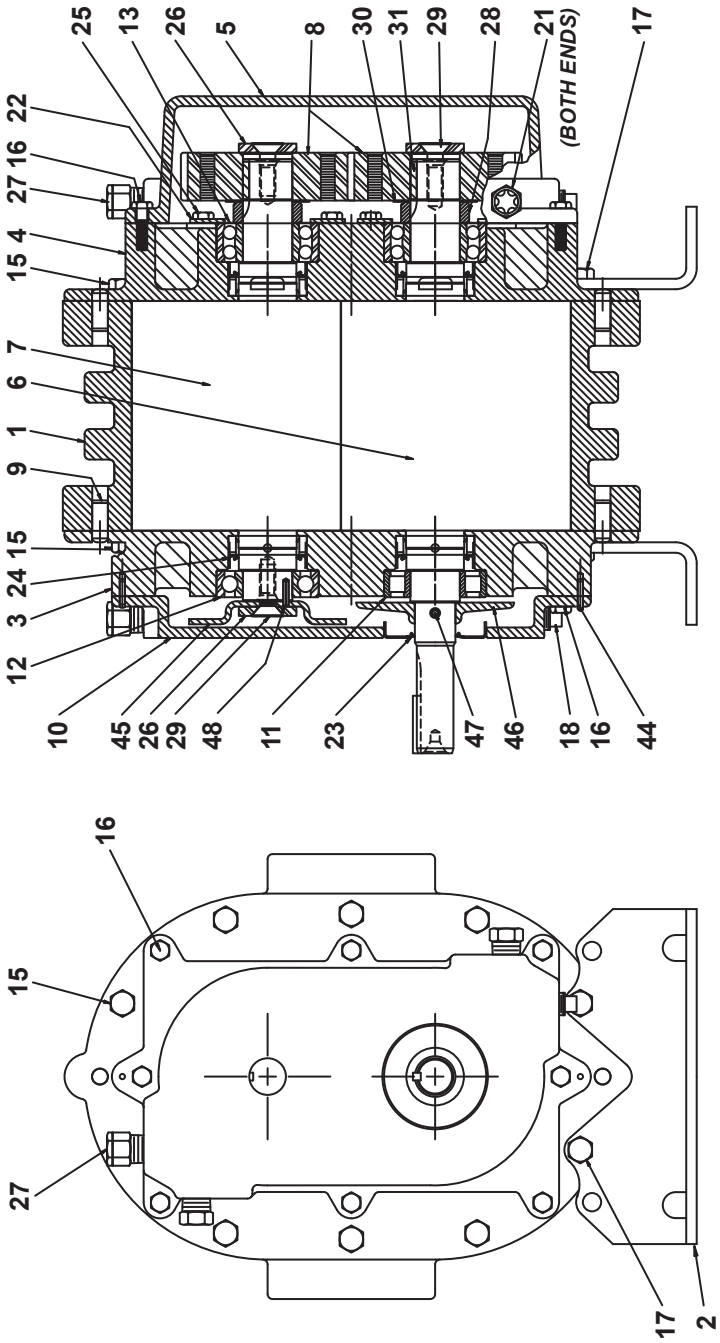

Tuthill
PUMP YOUR HEART INTO IT

4840 W. KEARNEY ST., SPRINGFIELD, MO 65803 • P (417) 865-8715 • F (417) 865-2950

CE

DECLARATION OF INCORPORATION

Herewith we declare that the items detailed below are in conformity with the provisions of the Machinery Directive 2006/42/EC.

Information on the items detailed are compiled per the Machinery Directive 2006/42/EC, Annex VII, part A and are the responsibility of the person listed below.

The items detailed below must not be put into service until the machinery into which it is to be incorporated has been declared in conformity with the provisions of the relevant directive(s).

Other directives and standards that apply to this Declaration of Incorporation:

EN 1012-1:1996 - Compressors and vacuum pumps - Safety requirements - Part 1: Compressors

The scope of the Declaration of Incorporation is for bare shaft Rotary Positive Displacement (CP Series) Blowers

2000, 3000, 4000, 6000, 7000

David L. Schardt

David Schardt
Vice President of Engineering
Tuthill Vacuum & Blower Systems

WARRANTY – BLOWER PRODUCTS

Subject to the terms and conditions hereinafter set forth and set forth in General Terms of Sale, Tuthill Vacuum & Blower Systems (the Seller) warrants products and parts of its manufacture, when shipped, and its work (including installation and start-up) when performed, will be of good quality and will be free from defects in material and workmanship. This warranty applies only to Seller's equipment, under use and service in accordance with seller's written instructions, recommendations and ratings for installation, operating, maintenance and service of products, for a period as stated in the table below. Because of varying conditions of installation and operation, all guarantees of performance are subject to plus or minus 5% variation. (Non-standard materials are subject to a plus or minus 10% variation)

PRODUCT TYPE	TYPE OF APPLICATION	
	ATMOSPHERIC AIR OR PROCESS AIR WITHOUT LIQUIDS PRESENT	PROCESS GASES OTHER THAN AIR, OR ANY LIQUID INJECTED APPLICATION
New *(Qx™ models only)*	30 months from date of shipment, or 24 months after initial startup date, whichever occurs first.	Consult Factory
New *(all other models)*	24 months from date of shipment, or 18 months after initial startup date, whichever occurs first	18 months from date of shipment, or 12 months after initial startup date, whichever occurs first
Repair	12 months from date of shipment, or remaining warranty period, whichever is greater	12 months from date of shipment, or remaining warranty period, whichever is greater

THIS WARRANTY EXTENDS ONLY TO BUYER AND/OR ORIGINAL END USER, AND IN NO EVENT SHALL THE SELLER BE LIABLE FOR PROPERTY DAMAGE SUSTAINED BY A PERSON DESIGNATED BY THE LAW OF ANY JURISDICTION AS A THIRD PARTY BENEFICIARY OF THIS WARRANTY OR ANY OTHER WARRANTY HELD TO SURVIVE SELLER'S DISCLAIMER.

All accessories furnished by Seller but manufactured by others bear only that manufacturer's standard warranty.

All claims for defective products, parts, or work under this warranty must be made in writing immediately upon discovery and, in any event within one (1) year from date of shipment of the applicable item and all claims for defective work must be made in writing immediately upon discovery and in any event within one (1) year from date of completion thereof by Seller. Unless done with prior written consent of Seller, any repairs, alterations or disassembly of Seller's equipment shall void warranty. Installation and transportation costs are not included and defective items must be held for Seller's inspection and returned to Seller's Ex-works point upon request.

THERE ARE NO WARRANTIES, EXPRESSED, IMPLIED OR STATUTORY WHICH EXTEND BEYOND THE DESCRIPTION ON THE FACE HEREOF, INCLUDING WITHOUT LIMITATION, THE IMPLIED WARRANTIES OF MERCHANTABILITY AND FITNESS OF PURPOSE.

After Buyer's submission of a claim as provided above and its approval, Seller shall at its option either repair or replace its product, part, or work at the original Ex-works point of shipment, or refund an equitable portion of the purchase price.

The products and parts sold hereunder are not warranted for operation with erosive or corrosive material or those which may lead to build up of material within the product supplied, nor those which are incompatible with the materials of construction. The Buyer shall have no claim whatsoever and no product or part shall be deemed to be defective by reason of failure to resist erosive or corrosive action nor for problems resulting from build-up of material within the unit nor for problems due to incompatibility with the materials of construction.

Any improper use, operation beyond capacity, substitution of parts not approved by Seller, or any alteration or repair by others in such manner as in Seller's judgment affects the product materially and adversely shall void this warranty.

No employee or representative of Seller other than an Officer of the Company is authorized to change this warranty in any way or grant any other warranty. Any such change by an Officer of the Company must be in writing.

The foregoing is Seller's only obligation and Buyer's only remedy for breach of warranty, and except for gross negligence, willful misconduct and remedies permitted under the General Terms of Sale in the sections on CONTRACT PERFORMANCE, INSPECTION AND ACCEPTANCE and the PATENTS Clause hereof, the foregoing is BUYER'S ONLY REMEDY HEREUNDER BY WAY OF BREACH OF CONTRACT, TORT OR OTHERWISE, WITHOUT REGARD TO WHETHER ANY DEFECT WAS DISCOVERED OR LATENT AT THE TIME OF DELIVERY OF THE PRODUCT OR WORK. In no event shall Buyer be entitled to incidental or consequential damages. Any action for breach of this agreement must commence within one (1) year after the cause of action has occurred.

May 2008

OPERATING DATA FORM / PRODUCT REGISTRATION

It is to the user's advantage to have the requested data filled in below and available in the event a problem should develop in the blower or the system. This information is also helpful when ordering spare parts.

Model No. _____ V-Belt Size _____ Length _____

Serial No. _____ Type of Lubrication _____

Start-up Date _____ _____

Pump RPM _____ Operating Vacuum _____

Pump Sheave Diameter _____ Any Other Special Accessories Supplied or in Use:

Motor Sheave Diameter _____ _____

Motor RPM _____ HP _____ _____

NOTES: _____

_____

_____

_____

IMPORTANT

All blowers manufactured by Tuthill Vacuum & Blower Systems are date-coded at time of shipment. In order to assure you of the full benefits of the product warranty, please complete, tear out and return the product registration card, or register online at **tuthillvacuumblower.com**.

For Service & Repair, Technical Support, or Product Sales contact:

Tuthill Vacuum & Blower Systems
4840 West Kearney Street
Springfield, Missouri USA 65803-8702
O 417.865.8715 800.825.6937
F 417.865.2950
tuthillvacuumblower.com

Manual 2017 1016 ENG

Copyright © 2016 Tuthill Vacuum & Blower Systems
All rights reserved. Product information and specifications subject to change.